PRIUS D MF

Multi-Function motor driven diaphragm metering pump

Data Sheet

R140625

Motor-driven diaphragm dosing pump, mechanical actuated, PRIUS combines efficiency and chemical resistance to a wide capacity range for an extensive number of applications.

- Multifunction motor pump with inverter
- Working mode: Constant, ppm, %, mlq, pause-work, weekly, mA, pulse, Volt and Batch
- Level control
- Alarms
- Stand-by
- Double position of the electronic unit (standard or rotated mounting)
- PTFE diaphragm
- Aluminium enclosure
- Spring return mechanism
- Manual degassing valve (PVDF and PP pump heads)
- Flow regulation
- Liquid ends available in different sizes and materials
- Double ball check valve
- Tropicalized motors
- MODBUS option

STANDARD MOUNTING

ROTATED MOUNTING

The display has a four-color backlight that highlights: red color alarm, green color normal operation, yellow color attention, white color standby/off

Identification code

CIRCUIT	
MF	Multifunction 230 VAC
M1	Multifunction 115 VAC
MM	Multifunction+Modbus

P	D	M	F	0	1	0	0	6	0	M	V	1	2	0	0	N	0	0	0

BAR

L/H

CUSTOM.

PACKAGING

INTERNAL

COLOR

UMS PUMP HEAD MATERIAL	
M	SS
U	PVDF
V	PP

NM/TM PUMP HEAD MATERIAL	
K	PVDF
P	PP
S	SS

	MOTOR
2	0,37Kw

REDUCTION GEAR		(50Hz)
1	8:1	175 s/min
2	15:1	94 s/min
4	20:1	70 s/min
5	40:1	35 s/min

O RING	
V	FKM B
D	Dutral

LUBRICANT TYPE	
BRAND	MODEL
MOBIL	MOBILGEAR 632
SHELL	OMALA OIL 320
BP	ENERGOL GR-XP 320
IP	MELLANA OIL 320
ESSO	SPARTAN EP 320
AGIP	BLASIA 320

Via Donatori di Sangue, 1 - 02100 Rieti (Italy)
+39 074622841 | emecpumps.com

Specifications subject to change without notice | R2025

emec SIMPLE AS WATER

IQNET CERTIFIED MANAGEMENT SYSTEM

qualityaustria SYSTEM CERTIFIED

ISO 9001:2015 No.07728/0
ISO 14001:2015 No.00997/0
ISO 45001:2018 No.01121/0

PRIUS D MF

Data Sheet

Multi-Function motor driven diaphragm metering pump

"PRIUS D MF" SERIES - SINGLE PHASE SUPPLY

Features

- Aluminium enclosure (epoxy coating)
- Spring return mechanism
- Power supply: 230 VAC (+/-10%) - 50/60 Hz - single-phase
- Consumption 230VAC 2.3Arms 530VA | 115VAC 4.6Arms 530VA
- Environment temperature: ..... -10-40°C (14-104°F)
- Chemical temperature with PVDF pump head: ..... -10-65°C (14-149°F)*
- Chemical temperature with SS pump head: ..... -10-90°C (14-194°F)*
- Chemical temperature with PP pump head: ..... -10-40°C (14-104°F)
- Installation class II
- Pollution level 2
- Audible noise..... 78 dbA (± 5 dB)
- Protection degree ..... IP 55
- Max suction height ..... 3 m
- Oil capacity..... 0,3 lt (Refer to "Lubricant type" table)

High pressure ranges available (SS pump head).

* The specified tempe ature can be exceeded temporarily (max 15') for sterilization or flushing with hot water.

PVDF PUMP HEAD

SS PUMP HEAD

PP PUMP HEAD

Via Donatori di Sangue, 1 - 02100 Rieti (Italy)
+39 074622841 | emecpumps.com

Specifications subject to change without notice | R2025

emec SIMPLE AS WATER

IQNET CERTIFIED MANAGEMENT SYSTEM

qualityaustria SYSTEM CERTIFIED

ISO 9001:2015 No.07728/0
ISO 14001:2015 No.00997/0
ISO 45001:2018 No.01121/0

Price PRIUS D MF Series | STANDARD

PRIUS D MF

bar	l/h	Pump Head				Motor	PVDF
		model	stroke (mm)	SPM	reduction	kW	hoses connection
10	60	NM	3	175	8:1	0,37	G 1/2" 13 mm (i.d.)
10	30	NM	3	94	15:1	0,37	G 1/2" 13 mm (i.d.)
10	24	NM	3	70	20:1	0,37	G 1/2" 13 mm (i.d.)
10	12	NM	3	35	40:1	0,37	G 1/2" 13 mm (i.d.)
10	16	NM	4	35	40:1	0,37	G 1/2" 13 mm (i.d.)
10	105	TM	3	175	8:1	0,37	G 3/4" 13 mm (i.d.)
10	56	TM	3	94	15:1	0,37	G 3/4" 13 mm (i.d.)
10	42	TM	3	70	20:1	0,37	G 3/4" 13 mm (i.d.)
10	21	TM	3	35	40:1	0,37	G 3/4" 13 mm (i.d.)
7	160	TM	4	175	8:1	0,37	G 3/4" 13 mm (i.d.)
7	86	TM	4	94	15:1	0,37	G 3/4" 13 mm (i.d.)
7	64	TM	4	70	20:1	0,37	G 3/4" 13 mm (i.d.)
7	32	TM	4	35	40:1	0,37	G 3/4" 13 mm (i.d.)
5	240	TM	6	175	8:1	0,37	G 3/4" 13 mm (i.d.)
5	128	TM	6	94	15:1	0,37	G 3/4" 18 mm (i.d.)
5	96	TM	6	70	20:1	0,37	G 3/4" 18 mm (i.d.)
5	48	TM	6	35	40:1	0,37	G 3/4" 18 mm (i.d.)
2	1000	UMS	10	175	8:1	0,37	G 3/4" 18 mm (i.d.)
5	1000	UMS	10	175	8:1	0,55	G 1 1/2" 30 mm (i.d.)
4	520	UMS	10	94	15:1	0,37	G 1 1/2" 30 mm (i.d.)
5	390	UMS	10	70	20:1	0,37	G 1 1/2" 30 mm (i.d.)
5	180	UMS	10	35	40:1	0,37	G 1 1/2" 30 mm (i.d.)
5	350	UMS	4	175	8:1	0,37	G 1 1/2" 30 mm (i.d.)
5	188	UMS	4	94	15:1	0,37	G 1 1/2" 30 mm (i.d.)
5	140	UMS	4	70	20:1	0,37	G 1 1/2" 30 mm (i.d.)
5	70	UMS	4	35	40:1	0,37	G 1 1/2" 30 mm (i.d.)
5	440	UMS	5	175	8:1	0,37	G 1 1/2" 30 mm (i.d.)
5	236	UMS	5	94	15:1	0,37	G 1 1/2" 30 mm (i.d.)
5	176	UMS	5	70	20:1	0,37	G 1 1/2" 30 mm (i.d.)
5	88	UMS	5	35	40:1	0,37	G 1 1/2" 30 mm (i.d.)
5	530	UMS	6	175	8:1	0,37	G 1 1/2" 30 mm (i.d.)
5	284	UMS	6	94	15:1	0,37	G 1 1/2" 30 mm (i.d.)
5	212	UMS	6	70	20:1	0,37	G 1 1/2" 30 mm (i.d.)
5	106	UMS	6	35	40:1	0,37	G 1 1/2" 30 mm (i.d.)
3	750	UMS	8	175	8:1	0,37	G 1 1/2" 30 mm (i.d.)
5	380	UMS	8	94	15:1	0,37	G 1 1/2" 30 mm (i.d.)
5	290	UMS	8	70	20:1	0,37	G 1 1/2" 30 mm (i.d.)
5	141	UMS	8	35	40:1	0,37	G 1 1/2" 30 mm (i.d.)

Price PRIUS D MF Series | STANDARD

PRIUS D MF

bar	l/h	Pump Head				Motor	AISI 316L
		model	stroke (mm)	SPM	reduction	kW	hoses connection
10	60	NM	3	175	8:1	0,37	R 1/2″
10	30	NM	3	94	15:1	0,37	R 1/2″
10	24	NM	3	70	20:1	0,37	R 1/2″
10	12	NM	3	35	40:1	0,37	R 1/2″
10	16	NM	4	35	40:1	0,37	R 1/2″
10	105	TM	3	175	8:1	0,37	R 3/4″
10	56	TM	3	94	15:1	0,37	R 3/4″
10	42	TM	3	70	20:1	0,37	R 3/4″
10	21	TM	3	35	40:1	0,37	R 3/4″
7	160	TM	4	175	8:1	0,37	R 3/4″
7	86	TM	4	94	15:1	0,37	R 3/4″
7	64	TM	4	70	20:1	0,37	R 3/4″
7	32	TM	4	35	40:1	0,37	R 3/4″
5	240	TM	6	175	8:1	0,37	R 3/4″
5	128	TM	6	94	15:1	0,37	R 3/4″
5	96	TM	6	70	20:1	0,37	R 3/4″
5	48	TM	6	35	40:1	0,37	R 3/4″
2	1000	UMS	10	175	8:1	0,37	R 3/4″
4	520	UMS	10	94	15:1	0,37	R 1″
5	390	UMS	10	70	20:1	0,37	R 1″
5	180	UMS	10	35	40:1	0,37	R 1″
5	350	UMS	4	175	8:1	0,37	R 1″
5	188	UMS	4	94	15:1	0,37	R 1″
5	140	UMS	4	70	20:1	0,37	R 1″
5	70	UMS	4	35	40:1	0,37	R 1″
5	440	UMS	5	175	8:1	0,37	R 1″
5	236	UMS	5	94	15:1	0,37	R 1″
5	176	UMS	5	70	20:1	0,37	R 1″
5	88	UMS	5	35	40:1	0,37	R 1″
5	530	UMS	6	175	8:1	0,37	R 1″
5	284	UMS	6	94	15:1	0,37	R 1″
5	212	UMS	6	70	20:1	0,37	R 1″
5	106	UMS	6	35	40:1	0,37	R 1″
3	750	UMS	8	175	8:1	0,37	R 1″
5	380	UMS	8	94	15:1	0,37	R 1″
5	290	UMS	8	70	20:1	0,37	R 1″
5	141	UMS	8	35	40:1	0,37	R 1″

Price PRIUS D MF Series | STANDARD

PRIUS D MF

bar	l/h	Pump Head				Motor	
		model	stroke (mm)	SPM	reduction	kW	hoses connection
10	60	NM	3	175	8:1	0,37	G 1/2" 13 mm (i.d.)
10	30	NM	3	94	15:1	0,37	G 1/2" 13 mm (i.d.)
10	24	NM	3	70	20:1	0,37	G 1/2" 13 mm (i.d.)
10	12	NM	3	35	40:1	0,37	G 1/2" 13 mm (i.d.)
10	16	NM	4	35	40:1	0,37	G 1/2" 13 mm (i.d.)
10	105	TM	3	175	8:1	0,37	G 3/4" 13 mm (i.d.)
10	56	TM	3	94	15:1	0,37	G 3/4" 13 mm (i.d.)
10	42	TM	3	70	20:1	0,37	G 3/4" 13 mm (i.d.)
10	21	TM	3	35	40:1	0,37	G 3/4" 13 mm (i.d.)
7	160	TM	4	175	8:1	0,37	G 3/4" 13 mm (i.d.)
7	86	TM	4	94	15:1	0,37	G 3/4" 13 mm (i.d.)
7	64	TM	4	70	20:1	0,37	G 3/4" 13 mm (i.d.)
7	32	TM	4	35	40:1	0,37	G 3/4" 13 mm (i.d.)
5	240	TM	6	175	8:1	0,37	G 3/4" 13 mm (i.d.)
5	128	TM	6	94	15:1	0,37	G 3/4" 18 mm (i.d.)
5	96	TM	6	70	20:1	0,37	G 3/4" 18 mm (i.d.)
5	48	TM	6	35	40:1	0,37	G 3/4" 18 mm (i.d.)
2	1000	UMS	10	175	8:1	0,37	G 3/4" 18 mm (i.d.)
5	1000	UMS	10	175	8:1	0,55	G 1 1/2" 30 mm (i.d.)
4	520	UMS	10	94	15:1	0,37	G 1 1/2" 30 mm (i.d.)
5	390	UMS	10	70	20:1	0,37	G 1 1/2" 30 mm (i.d.)
5	180	UMS	10	35	40:1	0,37	G 1 1/2" 30 mm (i.d.)
5	350	UMS	4	175	8:1	0,37	G 1 1/2" 30 mm (i.d.)
5	188	UMS	4	94	15:1	0,37	G 1 1/2" 30 mm (i.d.)
5	140	UMS	4	70	20:1	0,37	G 1 1/2" 30 mm (i.d.)
5	70	UMS	4	35	40:1	0,37	G 1 1/2" 30 mm (i.d.)
5	440	UMS	5	175	8:1	0,37	G 1 1/2" 30 mm (i.d.)
5	236	UMS	5	94	15:1	0,37	G 1 1/2" 30 mm (i.d.)
5	176	UMS	5	70	20:1	0,37	G 1 1/2" 30 mm (i.d.)
5	88	UMS	5	35	40:1	0,37	G 1 1/2" 30 mm (i.d.)
5	530	UMS	6	175	8:1	0,37	G 1 1/2" 30 mm (i.d.)
5	284	UMS	6	94	15:1	0,37	G 1 1/2" 30 mm (i.d.)
5	212	UMS	6	70	20:1	0,37	G 1 1/2" 30 mm (i.d.)
5	106	UMS	6	35	40:1	0,37	G 1 1/2" 30 mm (i.d.)
3	750	UMS	8	175	8:1	0,37	G 1 1/2" 30 mm (i.d.)
5	380	UMS	8	94	15:1	0,37	G 1 1/2" 30 mm (i.d.)
5	290	UMS	8	70	20:1	0,37	G 1 1/2" 30 mm (i.d.)
5	141	UMS	8	35	40:1	0,37	G 1 1/2" 30 mm (i.d.)

Price PRIUS D MF Series | HIGH PRESSURE

PRIUS D MF AP

bar	l/h	Pump Head				Motor	AISI 316L
		model	stroke (mm)	SPM	reduction	kW	hoses connection
100	4	LM AP	1,5	175	8:1	0,37	R 3/8″
100	2	LM AP	1,5	94	15:1	0,37	R 3/8″
100	1,5	LM AP	1,5	70	20:1	0,37	R 3/8″
50	17	MM AP	2	175	8:1	0,37	R 1/2″
50	9	MM AP	2	94	15:1	0,37	R 1/2″
50	5	MM AP	2	70	20:1	0,37	R 1/2″
50	2,5	MM AP	2	35	40:1	0,37	R 1/2″
30	28	NM AP	2	175	8:1	0,37	R 1/2″
30	15	NM AP	2	94	15:1	0,37	R 1/2″
30	10	NM AP	2	70	20:1	0,37	R 1/2″
30	5	NM AP	2	35	40:1	0,37	R 1/2″
30	76	SM AP	4	175	8:1	0,37	R 1/2″
30	41	SM AP	4	94	15:1	0,37	R 1/2″
30	30	SM AP	4	70	20:1	0,37	R 1/2″
30	14	SM AP	4	35	40:1	0,37	R 1/2″
20	91	TM AP	6	94	15:1	0,37	R 3/4″
20	68	TM AP	6	70	20:1	0,37	R 3/4″
20	34	TM AP	6	35	40:1	0,37	R 3/4″

PRIUS D MF

Multi-Function motor driven diaphragm metering pump

Data Sheet

Dimensions

WEIGHTS AND DIMENSIONS ARE REFERRED TO MOTOR PUMPS WITH UM PUMP HEAD MOD.

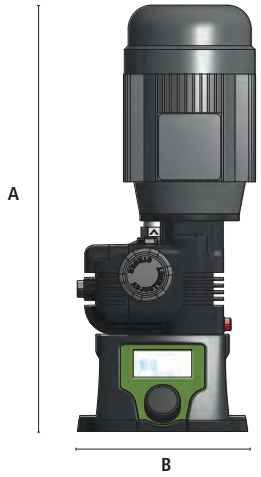

DIMENSIONS (mm)	
	UM pump (PP)
A	440 (0,37 kW) , 540 (0,55 kW)
B	200
C	340
D	340
E	200
F	140
G	160
∅ fixing hole	8

WEIGHT (kg)	
with PP pump head	16
with SS pump head	25

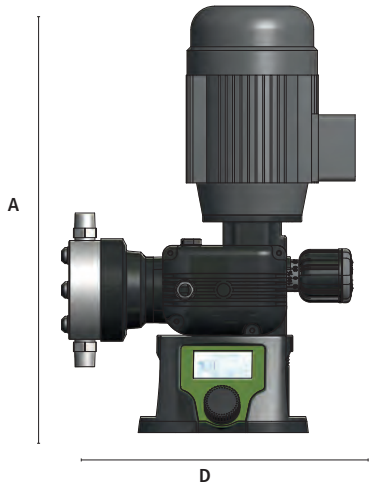

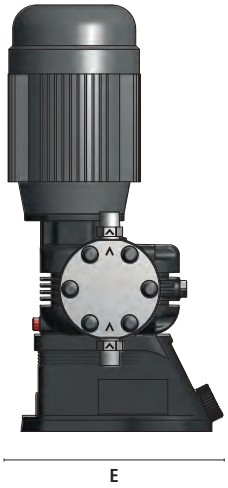

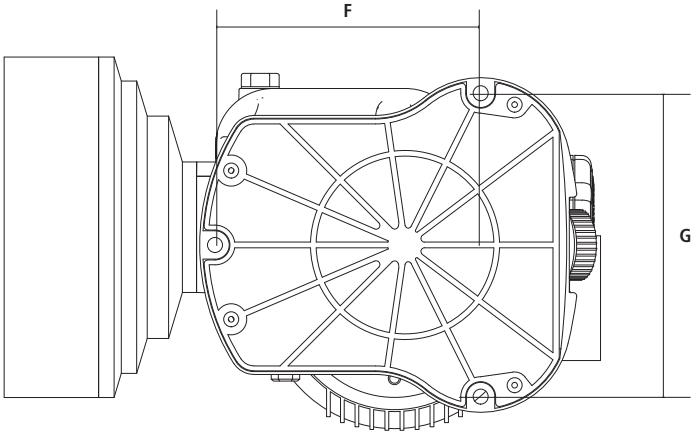

Via Donatori di Sangue, 1 - 02100 Rieti (Italy)
+39 074622841 | emecpumps.com

Specifications subject to change without notice | R2025

emec SIMPLE AS WATER

IQNET CERTIFIED MANAGEMENT SYSTEM
qualityaustria SYSTEM CERTIFIED
ISO 9001:2015 No.07728/0
ISO 14001:2015 No.00997/0
ISO 45001:2018 No.01121/0

DIMENSIONS (MM) PRIUS WITH UMS PUMP HEAD (0,37KW)

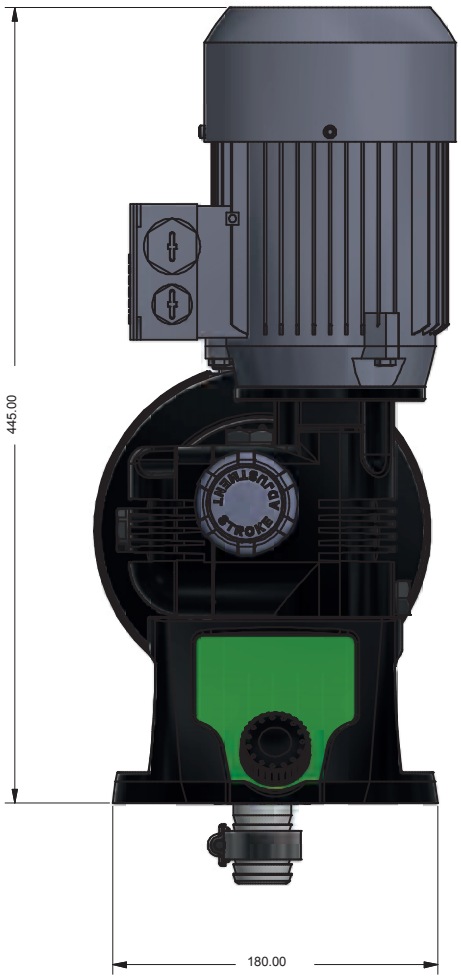

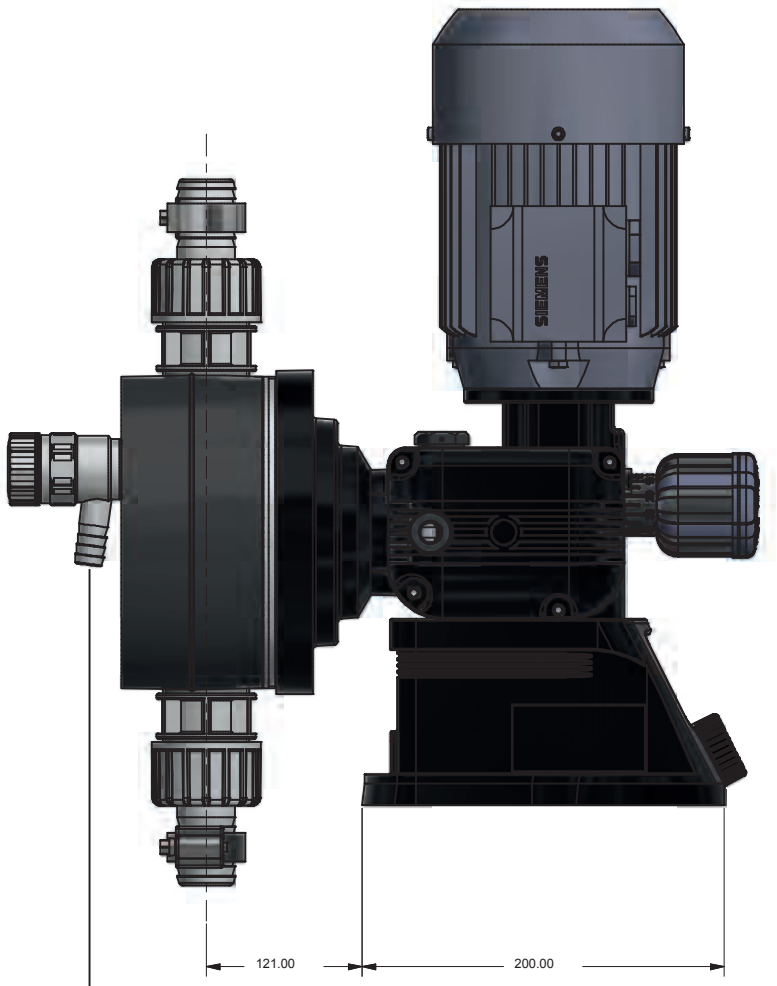

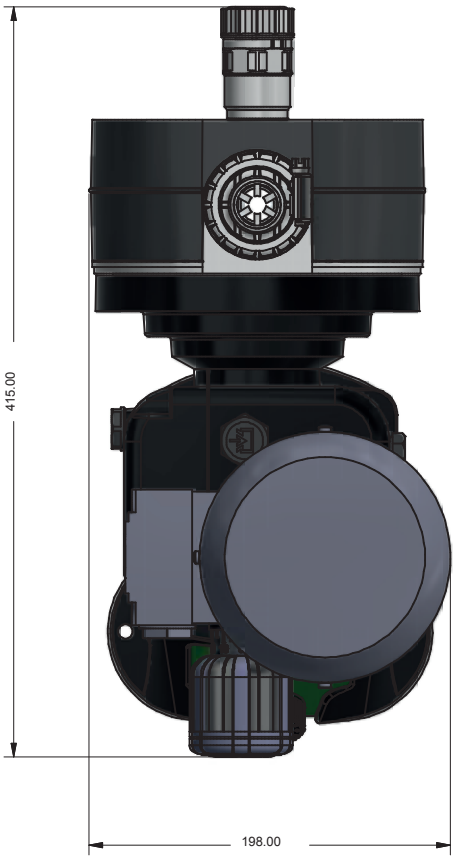

WARNING: AUTOMATIC PURGE VALVE FOR HIGH PRESSURE. CONNECT THE EXHAUST PIPE 16X22 PVC AND INSERT THE OTHER END IN THE TANK OF THE PRODUCT TO BE DOSED. THE EXHAUST PIPE MUST BE FIXED AND NOT LEFT FREE TO MOVE.

Via Donatori di Sangue, 1 - 02100 Rieti (Italy)
+39 074622841 | emecpumps.com

Specifications subject to change without notice | R2025

emec
SIMPLE AS WATER

IQNET CERTIFIED MANAGEMENT SYSTEM
qualityaustria SYSTEM CERTIFIED
ISO 9001:2015 No.07728/0
ISO 14001:2015 No.00997/0
ISO 45001:2018 No.01121/0