R990525

PRIUS P MF

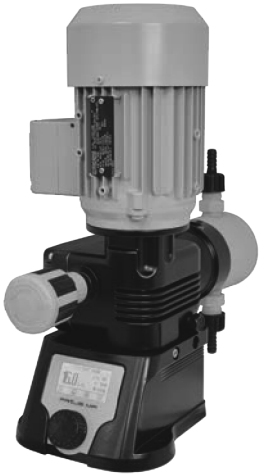

PP PUMP HEAD

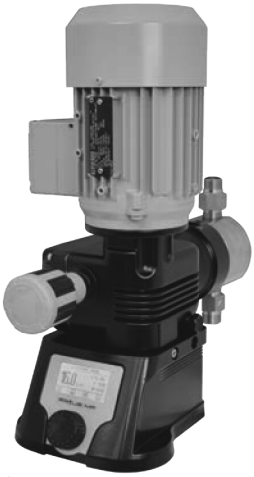

SS PUMP HEAD

MULTIFUNCTION MOTOR DRIVEN PLUNGER METERING PUMP

EN

OPERATING MANUAL

R3-06-20

This operating instructions contains safety information that if ignored can endanger life or result in serious injury.

Read these instructions **carefully** before use and keep them for future reference. The original instruction is in English.
Information and specifications on this manual could be uncorrect or could have printing errors.
Specifications are subject to change without notice.

Product Description *Descrizione Prodotto*	Motor-driven dosing pump, PRIUS P MF series *Pompa dosatrice a motore, serie PRIUS P MF*
Product Identification Codes (the "_" symbols complete the product code based on the configuration of the variants) *Codici Identificativi Prodotto* *(i simboli "_" completano il codice del prodotto in base alla configurazione delle varianti)*	**PPMF** _____ **PPM1** _____ **PPM2** _____ **PPMM** _____

The display has a four-color backlight that highlights: red color alarm, green color normal operation, yellow color attention, white color standby/off

GENERAL SAFETY GUIDELINES

Operating, installing, or maintaining the unit in any way that is not covered in this manual could cause death, serious personal injury, or damage to the equipment.

ICON

This manual use the following safety message icon:

Warning!
Indicates a hazardous situation which, if not avoided, will result in death or serious injury.

Warning!
Indicates a hazardous situation which, if not avoided, could result in death or serious injury.

Important - A practice not related to personal injury or additional information.

Cross reference - An instance which refers to related information elsewhere in the same document.

AC - Alternating current

Protective earth

DC - Direct current

Stand-by

PURPOSE OF USE AND SAFETY

METERING PUMP IS INTENDED FOR CHEMICAL DOSING AND DRINKING WATER TREATMENT.

Do not use in explosive area (EX).
Do not use with flammable chemicals.
Do not use with radioactive chemicals.

Use after a proper installation.

Use the pump in accordance with the data and specifications printed on the label.

Do not modify or use in a manner inconsistent with the provisions of the operating manual.

Keep the pump protected from sun and water. Avoid water splashes.

In emergencies the pump should be switched off immediately. Disconnect the power cable from the power supply.

When using pump with aggressive chemicals observe the regulations concerning the transport and storage of aggressive fluids.

When installing always observe national regulations.

Manufacturer is not liable for any unauthorized use or misuse of this product that may cause injury, damage to persons or materials.

Pump must be accessible at all times for both operating and servicing. Access must not be obstructed in any way.

Feeder should be interlocked with a no-flow protection device to automatically shut-off the pumps when there is no flow!

Adequate measures shall be taken to prevent cross connection of chemicals!

Chemical feeding must be stopped during backwash cycles and periods of noflow as these conditions may introduce the potential for chemical overdosing. Not doing so may result in elevated chemical concentrations and hazerdous gas introduction into the pool or spa.

Pump and accessories don't need maintenance but extraordinary maintenance must be executed by qualified and authorized personnel only.

Before any operation:
- **always read chemical Material Safety Data Sheet (MSDS);**
- **always wear protective clothing;**
- **always discharge the liquid end before servicing the pump.**
- **empty and rinse the liquid end before work on a pump which has been used with hazardous or unknown chemicals.**

This equipment requires regular maintenance to ensure potability requirements of the water and maintenance of improvements as declared by the manufaturer.

ENVIRONMENTAL SAFETY

Work area
Always keep the pump area clean to avoid and/or discover emissions.

Recycling guidelines

EWC code: 16 02 14

Always recycle according to these guidelines:
1. If the unit or parts are accepted by an authorized recycling company, then follow local recycling laws and regulations.
2. If the unit or parts are not accepted by an authorized recycling company, then return them to the nearest representative.

Waste and emissions regulations
Observe these safety regulations regarding waste and emissions:
- Dispose appropriately of all waste.
- Handle and dispose of the dosed chemical in compliance with applicable environmental regulations.
- Clean up all spills in accordance with safety and environmental procedures.
- Report all environmental emissions to the appropriate authorities.

LABELS

Fig. 1. Product label.

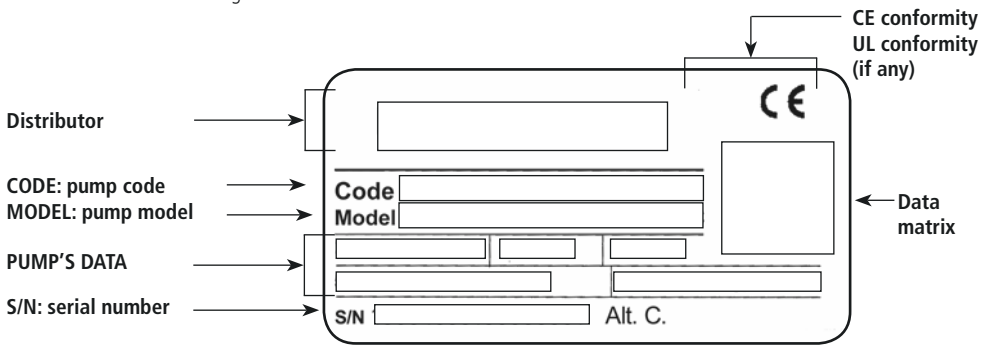

Spare parts

For spare parts orders or any other communication, refer to product label.
Code (CODE) and serial number (S / N) uniquely identify the pump.

Transportation and storage

A not suitable transportation or storage can cause damages.

Use origianal box to pack the pump.

Observe storage conditions also for transportation.

Although packed, always protect the unit against humidity and the action of chemicals.

Before return the dosing pump to the manufacturer Repair service, drain the chemical from pump head and rinse it. Refer to **Shutdown procedure.**

Fill the PRODUCT SERVICE REPAIR FORM and send it with the dosing pump.
Repair service is not accepted if PRODUCT SERVICE REPAIR FORM is missing.

DO NOT TRASH PACKAGING. USE IT TO RETURN THE PUMP.

Transportation and storage temperature ..... 10 / 50°C (32 / 122°F)
Humidity ..... 95% relative humidity (not condensed)

1. DESCRIPTION

1.1 PRIUS P MF Series

PRIUS P MF series is a multifunction motor-driven plunger series pumps with spring return mechanism. The plunger produces the flow thanks to the suction and delivery valves on the pump head

Flow rate is determined by the stroke length. The stroke length is adjustable from 0 to 100% using the stroke length adjustment knob.

The pump has different working modes: Constant, ppm, percentage, pause-work, volt, pulse, mA and batch..
Morover, PRIUS P MF has got:

- Double position of the electronic unit (default or alternative gear box position)
- Spring return mechanism
- Flow regulation
- Double ball check valve
- STAND-BY input
- LEVEL (level control) input
- ALARM contact output.
- MODBUS option if requested

All control and setup parameters are available through a digital keyboard and they are displayed on a LCD backlit display.

Some functions described into this manual may need accessories not included into the pump packaging.

Fig. 2. PRIUS P MF pump

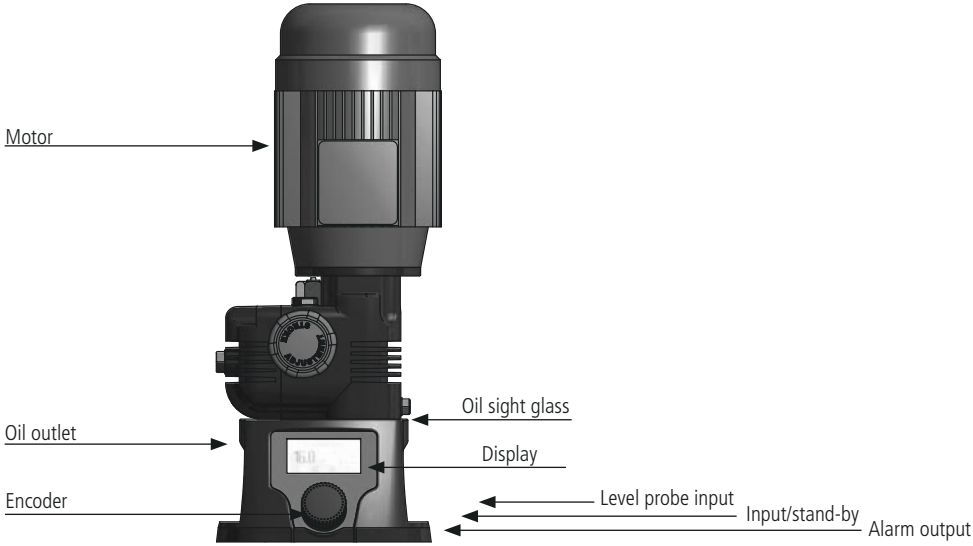

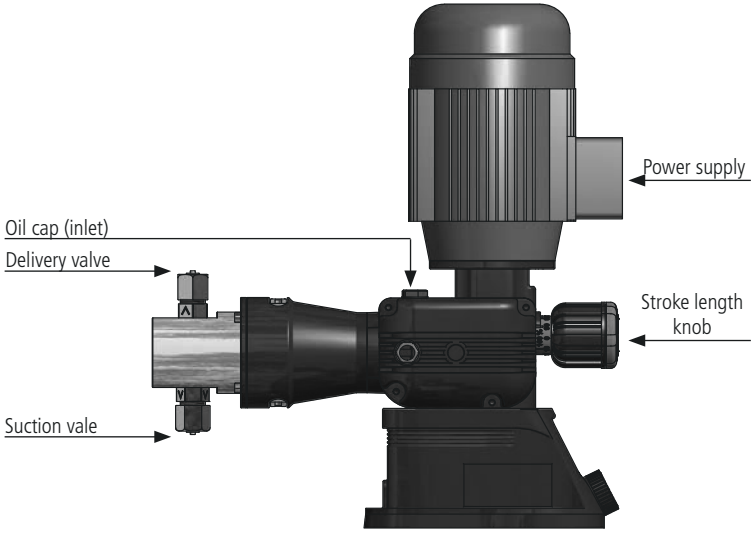

1.3 Mounting

Double position of the electronic unit (default or alternative gear box position).
Specify, when ordering, default or alternative gear box position.

To change position refer to **2.3 Rotate the gear box.**

DEFAULT GEAR BOX POSITION

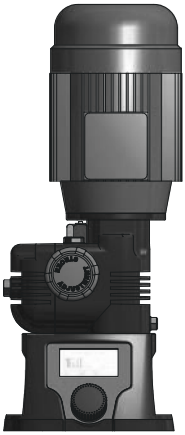

ALTERNATIVE GEAR BOX POSITION

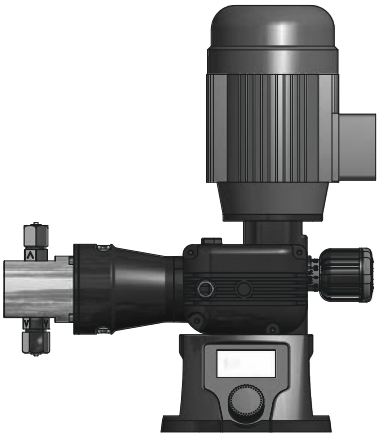

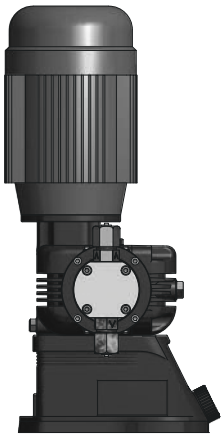

1.4 Features

Electrical		
Power supply	200-260 V - 50/60Hz	95-130 V - 50/60Hz
Maximum power	230 VAC 2.5A RMS; 575VA	115 VAC 5A RMS; 575VA
Fuse	6.3 A (slow blow fuse)	8 A (slow blow fuse)
Alarm output	24 Vac - 1A	24 Vac - 1A

Materials	
Enclosure	Aluminium
Pump head (availables)	PP Stainless Steel (AISI 316L)
Plunger (availables)	Ceramic Stainless Steel (AISI 420)

Mechanical
Spring return mechanism
Double ball check valve
Flow regulation

Environment temperature	-10 - 40°C (14 - 104°F)
Chemical temperature with SS pump head	-10 - 90°C (14 - 194°F) [1]
Chemical temperature with PP pump head	-10 - 40°C (14 - 104°F)
Installation class	II
Audible noise	78 dbA (± 5 dB)
Protection degree	IP 55
Max suction height	3 m
Oil capacity	0,3 lt (Refer to "Lubricant type" table)
Dosing accuracy	± 5% at the rated pressure

[1] The specified temperature can be exceeded temporarily (max 15') for sterilization or flushing with hot water.

1.3.1 PLUNGER

Prius P plunger pumps.

Material: ceramic (SIALOX96) or Stainless Steel (AISI420)

Lenghts available: 14, 25, 32, 40, 50 mm.

1.5 List of materials

✓ : standard
✗: option available

	PVDF	PP	PPV0	PMMA	PVC	PE	CE	GLASS	PTFE	SS	FKM B	EPDM	WAX	SI
PUMP HEAD		✗								✗				
PLUNGER							✗			✗				
BALLS							✓	✗	✗	✗				
SUCTION HOSE	✗				✗									
DELIVERY HOSE	✗				✗									
O RING									✗		✗	✗	✗	✗
LEVEL RPOBE/ FOOT FILTER	✓													
LEVEL PROBE CABLE						✓								

Tab. 1. PRIUS P - PP pump head

PRIUS P MF								
stroke length	PLUNGER diam. (mm)	PRIUS P MF	Stroke/1'	Pressure bar	Capacity l/h	Motor	HOSES CONNECTION PP	INSTALLATION KIT
15 mm	14	010024	175	10	24	0,37 kW	G1/2" 12x18	A
		010013	94		13			
		010010	70		10			
		010005	35		5			
	25	010080	175	10	80	0,37 kW	G1/2" 12x18	A
		010043	94		43			
		010032	70		32			
		010016	35		16			
	32	010130	175	10	130	0,37 kW	G1/2" 12x18	A
		010070	94		70			
		010052	70		52			
		010026	35		26			
	40	010210	175	10	210	0,37 kW	G3/4" d.i. 18 mm	B
		010113	94		113			
		010084	70		84			
		010042	35		42			
	50	010320	175	10	320	0,37 kW	G3/4" d.i. 18 mm	B
		010172	94		172			
		010128	70		128			
		010064	35		64			

ACCESSORIES

A. INSTALLATION KIT INCLUDED
1/2" foot filter with 13 mm (int. diam.) hose fitting
3/4" injection valve
13 x16 PVDF or 12 X 18 PVC delivery hose
13 x16 PVDF or 12 X 18 PVC suction hose

B. INSTALLATION KIT (OPTION)
1 1/2"foot filter with 18 mm (int. diam.) hose fitting (G1 1/2" - 18 mm)
1 1/2" injection valve

Packaging of all models always includes:
LEVEL PROBE
INPUT / STANDBY CABLE
ALARM CABLE

Tab. 2. PRIUS P - SS pump head

Stainless Steel pump does not fit installation kit.

PRIUS P MF							
stroke length	PLUNGER diam. (mm)	PRIUS P MF	Stroke/1'	Pressure bar	Capacity l/h	Motor	HOSES CONNECTION SS
15 mm	14	010024	175	10	24	0,37 kW	R1/2"
		010013	94		13		
		010010	70		10		
		010005	35		5		
	25	010080	175	10	80	0,37 kW	R1/2"
		010043	94		43		
		010032	70		32		
		010016	35		16		
	32	010130	175	10	130	0,37 kW	R1/2"
		010070	94		70		
		010052	70		52		
		010026	35		26		
	40	010210	175	10	210	0,37 kW	R3/4"
		010113	94		113		
		010084	70		84		
		010042	35		42		
	50	010320	175	10	320	0,37 kW	R3/4"
		010172	94		172		
		010128	70		128		
		010064	35		64		

1.6 Dimensions

Fig. 3. Pump dimension

WEIGHTS AND DIMENSIONS ARE REFERRED TO MOTOR PUMPS WITH UM PUMP HEAD MOD.

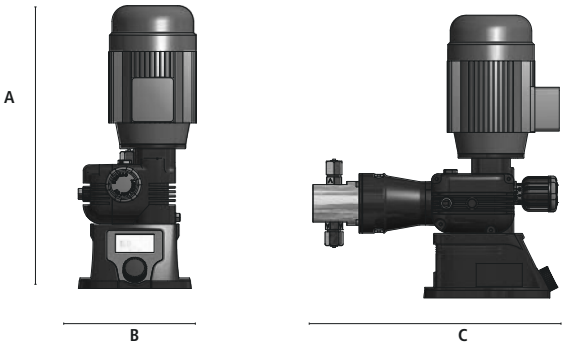

DIMENSIONS (mm)	
	UM pump (PP)
A	450
B	200
C	410
D	410
E	200
F	140
G	160
∅ fixing holes	8

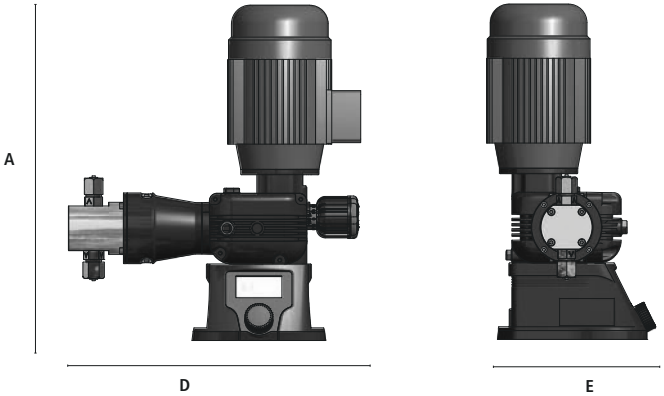

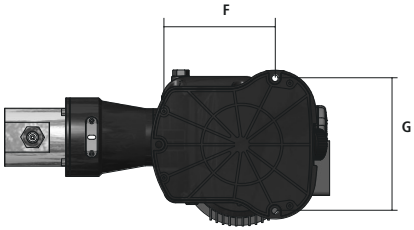

WEIGHT (kg)	
with PP pump head	16
with SS pump head	25

2. INSTALLATION

2.1 Installation warnings

Before start installation, the operator must be aware of safety precautions to prevent physical injury.

OPERATOR PROTECTION

Use safety equipment according to the company regulations.
Use this safety equipment within the work area during installation, service and when handling chemicals:

- **protective mask**
- **protective gloves**
- **safety goggles**
- **ear plugs or hear muffs**
- **further security device, if necessary.**

POWER SUPPLY DISCONNECTION

Always disconnect power to the motor before you perform any installation or maintenance tasks. Failure to disconnect power will result in serious physical injury.

INSTALLATION PUMP GUIDELINES

Install the pump
- in a safety place and fixed to the table / wall to avoid vibration problems;
- in an easy accessible place;
- in horizontal position.

Use only hoses compatibles with product to dose.

See "Chemical compatibility table" page 25.
If dosing product is not listed please consult full compatibility table or contact chemical's manufacturer.

2.2 Commissioning steps

5 steps of installation procedure:

1. Pump location
2. Oil filling
3. Piping connection
4. Connections: Stand-by/input, level, alarm
5. Start-up

2.2.1 Pump location

Pump must be installed on a flat base at max **3 m** height from tank's bottom.
Fasten the pump by clamping screws.

Injection point must be higher of tank to avoid accidental chemical injection.

Otherwise, connect a **multifunction valve** on delivery pipeline.

2.2.2 Oil filling

Pumps are shipped WITH OIL AND WITH A BLIND CAP.
At the job site you must replace the blind cap with the one supplied.
KEEP THE BLIND CAP for further shipping.

Fill the oil reservoir through oil inlet.
The required amount of oil is 0,30 lt. For acceptable lubricants see the table below.
Check oil level regularly. Change the oil every 8.000-10.000 operating hours.

You must never start the pump without oil.

Tab. 3. Acceptable oil for lubricating

BRAND	LUBRICANT TYPE
MOBIL	MOBILGEAR 632
SHELL	OMALA OIL 320
BP	ENERGOL GR-XP 320
IP	MELLANA OIL 320
ESSO	SPARTAN EP 320
AGIP	BLASIA 320

2.2.3 Piping connection

Never operate any pumping system with a blocked suction and discharge. Operation, even for a brief period under these conditions, can cause motor to overheat. You must take all necessary measures to avoid this condition.

Suction piping should be as short as possible and installed in vertical position to avoid air bubbles suction.

Suction and delivery valves must be installed in vertical position.

Hand-tighten the nuts firmly.
Do not use tongs or any other tool.

Delivery hose must be firmly fixed to avoid suddenly movements that could damage near objects

2.2.4 Pump head

PP pump head or SS pump head available.

For priming procedure see "5. PRIMING" page 22.

2.2.5 Foot filter

Foot filter is always recommended.
Foot filter should be adequate to suction piping and installed al least 10 cm from the tank bottom.

2.2.6 Installation drawings

Fig. 4. Installation drawings

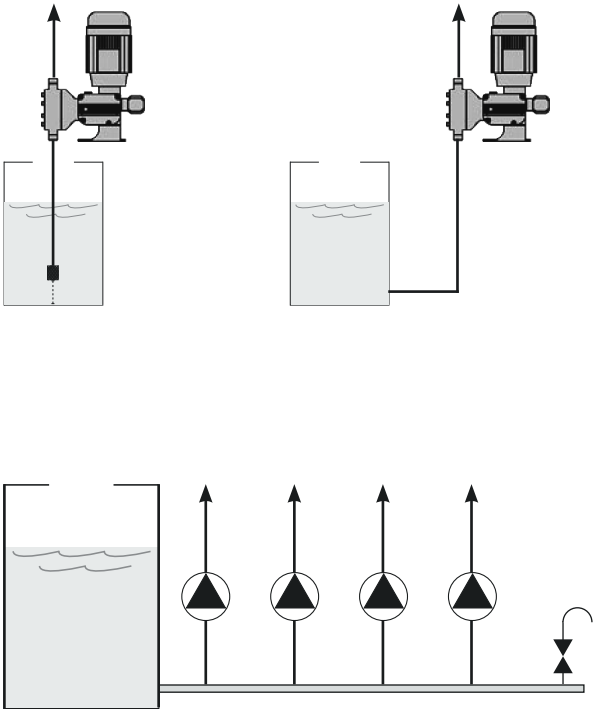

2.3 Rotate the gear box

Pump can be installed with a double position of the electronic unit (default or alternative gear box position).

Default position is shown in fig.6.

Fig. 5. Default to alternative position: move screws from A to A1 and from B to B1.

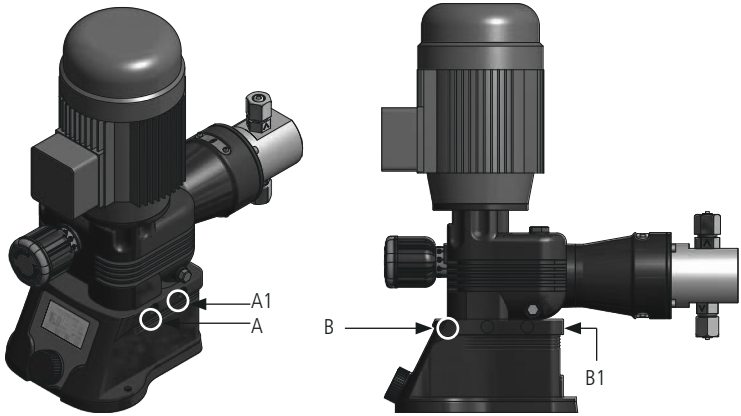

To rotate gear box:

- Unplug power supply.
- Remove the cap (A) on the box side located as in fig. 6.
- Unscrew the 6x70 screw with an hex key (size 5).
- Unscrew the M5x8 grub screw B with hex socket (2.5).
- Slightly lift and rotate the upper part of the pump of 90° counterclockwise, being careful not to excessively pull the power cord.
- Use the same screws on the second fixing holes A1 and B1.

Final position is in fig. 7.

Fig. 6. Alternative gear box position.

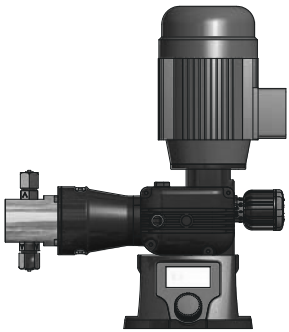

3. STAND-BY / INPUT / LEVEL PROBE / MODBUS (IF REQUESTED)

3.1 Stand-by / input and level probe cable connection

MODBUS (option)

Alarm output 4-pins connector

Input/stand-by 5-pins connector

Level input 2-pins connector

If not used, protect the mini DIN plugs with the rubber cap.

INPUT/STAND-BY

Connect the grey cable (stand-by / input) to 5-pins connector on the pump.
Stand-by / input wire colors are:

1 Yellow: +12 V (10mA) - Hall Effect if required
2 Blue: INPUT (+)
3 Brown: GND (-)
4 White: STAND-BY
5 Green: GND (-)

INPUT
This input may be used as follow:
-as pulse sender water meter
-as pulse sender water meter with Hall effec
-as startup contact for "BATCH" mode
-as voltage input for "VOLT" mode
-as current input for "mA" mode
-as Pulse input

LEVEL

Connect level probe to level input on the pump.

ALARM

Connect alarm output.
Alarm wire colors are:
1 Yellow (N.C. Contact)
2 Green (common)
3 White (N.O. Contact)
4 Blue (n/a)

MODBUS (if requested)

Connect MODBUS if present.
MODBUS wire colors are:

1 Yellow +RS485
2 Green -RS485
3 Blue GND

4. START UP

4.1 Start up

All operation before described must be carried out before starting the pump.

1. Pump location
2. Oil filling
3. Piping connection
4. Stand-by/input, level, alarm connections
5. Set up

Follow the **"GENERAL SAFETY GUIDELINES"** .

1. Start the pump at minimum pressure.
2. Turn the stroke lenght knob on 20%.
3. After 5 minutes, gradually increase the capacity until reaching the prescribed value for the operating condition.

⚠ **Control the pressure correspond to the one on the nameplate. If not, stop the pump immediatly.**

If the pump does not start to dose:
a) Stop the pump.
b) Prime the pump head ("5. PRIMING")
c) Start the pump again.

4. Monitor periodically the pump functioning.

5.1 Warnings

The first time and where use of the pump is suspended for a long period of time, priming may be necessary. It allows suction piping and pump head to fill with liquid before pumping against pressure.

Priming the pump is also recommended when there is air into pump head or into suction pipe.

⚠ **Feeder should be interlocked with a no-flow protection device to automatically shut-off the pumps when there is no flow!**

⚠ **Adequate measures shall be taken to prevent cross connection of chemicals!**

⚠ **Chemical feeding must be stopped during backwash cycles and periods of noflow as these conditions may introduce the potential for chemical overdosing. Not doing so may result in elevated chemical concentrations and hazerdous gas introduction into the pool or spa.**

⚠ **Never operate any pumping system with a blocked suction and discharge. You must take all necessary measures to avoid this condition.**

⚠ **SAFETY EQUIPMENT**
Use safety equipment according to the company regulations. Use this safety equipment within the work area:
- **Helmet**
- **Safety goggles (with side shields)**
- **Protective shoes**
- **Protective gloves**
- **Gas mask**

5.2 How to prime the pump

1. Connect all pipings (suction, delivery).
2. Rotate stroke lenght knob on 100%;
3. Power the pump.
4. Choose PRIMING on display, set time and start..
5. At the end, proceed to standard operating condition.

6. SET UP

6.1 Basic principle

Main adjustment on encoder

Choose a menu	Rotate encoder on the menu items.
Enter into the menu	Press encoder on the menu item, the display will show the options available.
Confirm a selection	Press encoder, the setting is saved.
Back to home	Press encoder on HOME icon.
Back to previous option	Press encoder on BACK icon.
Enter a value (numeric)	Press encoder on the value, rotate clockwise to increase, counterclockwise to decrease. Press to choose..

Data are saved any time you go back HOME or press BACK icon.

Each session has an automatic timeout after 60 seconds, then HOME screen will be displayed.

6.2 Display icon

HOME / SAVE

PRIMING

STATISTICS

SETTINGS

OFF

BACK / SAVE

START

STOP

RESET

SAVE

STROKE LENGTH KNOB POSITION

% PUMP WORKING

PARTIALIZED MODE
(pump partializes the dosing if flow rate decrease under 15%).

ALARM ALERT / STAND-BY

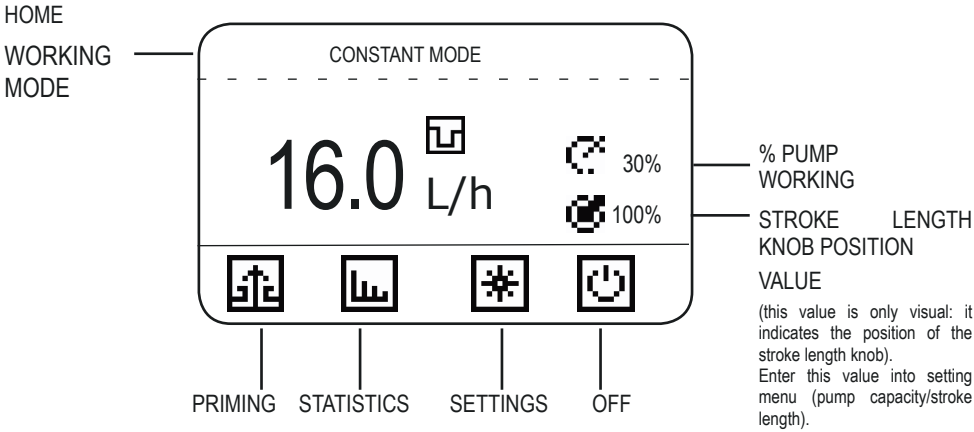

PRIMING

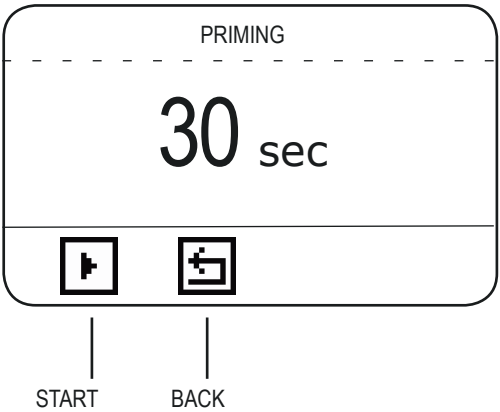

START: to run the PRIMING.

Stop button will stop and reset the counter (default value 30 sec).

The pump could wait up to 10 seconds before starts PRIMING.

STATISTICS

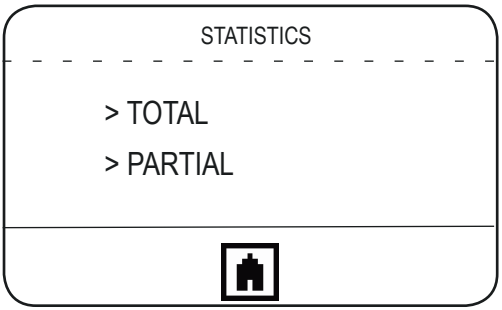

> TOTAL

> PARTIAL

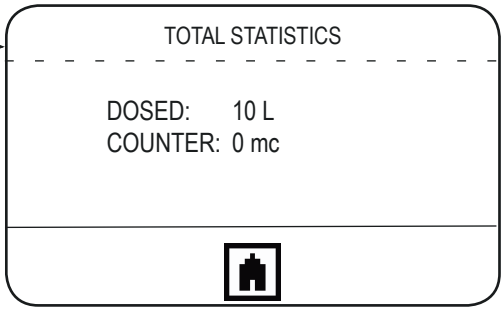

DOSED: total quantity dosed.
COUNTER: water meter counter (cubic meter of water).

To reset all counters see LOAD DEFAULT menu:
SETTINGS / FULL / SETUP / LOAD DEFAULT.

> TOTAL

> PARTIAL

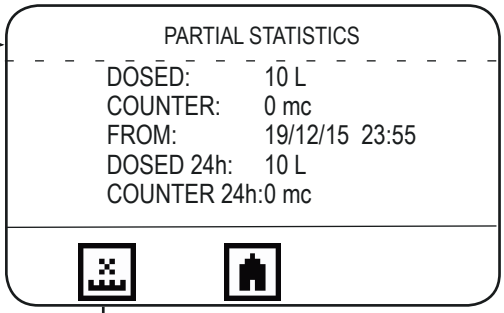

RESET

DOSED: total quantity dosed.
COUNTER: water meter counter (cubic meter of water).
FROM: date and hour of last statistic reset.
DOSED 24h: quantity dosed yesterday (00:00 to 23.59 of yesterday).
COUNTER 24h: water meter counter (00:00 to 23.59 of yesterday).
To reset counters press RESET icon.

SETTINGS

Setting session have an automatic timeout after 60 seconds, then go back to HOME screen.

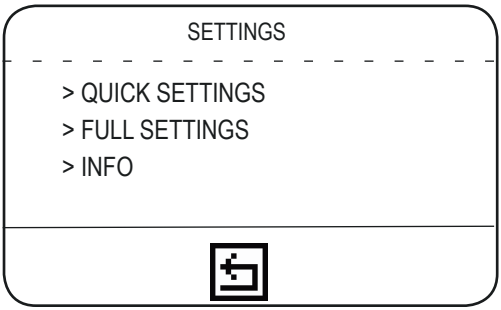

> QUICK SETTINGS
> FULL SETTINGS
> INFO

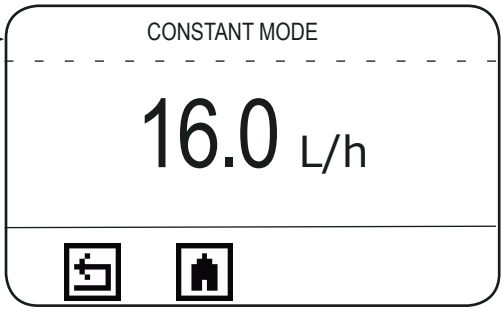

QUICK SETTINGS MENU

Use this menu to modify values of working mode without enter into full settings menu.

> QUICK SETTINGS
> FULL SETTINGS
> INFO

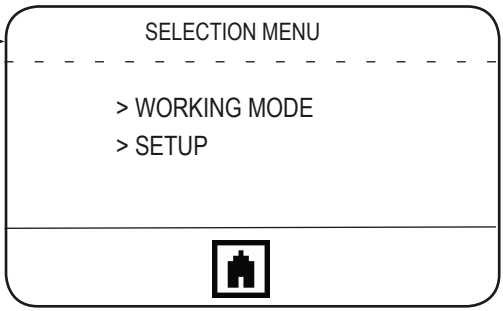

FULL SETTINGS MENU

Use this menu to set working mode and to define all settings.

> QUICK SETTINGS

> FULL SETTINGS ▶ WORKING MODE ▶

SETUP

> INFO

WORKING MODE

> CONSTANT
> PPM
> PERCENTAGE
> MLQ

WORKING MODE

> BATCH
> VOLT
> MA
> PAUSE-WORK
> WEEKLY PROGRAMMING

	PARAMETERS TO SET		NOTE	WHEN
CONSTANT	L/h: litres/hour		Pump doses at a constant rate.	To dose regularly a standard quantity of chemical (no external signal).
PPM	PPM:1.00 (max 9999.99) CONCENTRATION:10.0%		Dosing rate is determined by pulses from a water meter, PPM, chemical product (%) concentration.	When using an external signal from a pulse sender water meter and it's necessary to specify only PPM (parts per million) and product concentration, leaving the pump to manage coming pulses.
PERCENTAGE	PERCENTAGE:1.00 (max 100.00) CONCENTRATION:10.0%		Dosing rate is determined by pulses from a water meter, percentage (%), chemical product concentration.	When using an external signal from a pulse sender water meter and it's necessary to specify only % , leaving the pump to manage coming pulses.
MLQ	MLQ:1.00 (max 1000.00) CONCENTRATION:10.0%		Dosing rate is determined by pulses from a water meter on the base of set MLQ (milliliters per quintal), chemical product concentration (%).	When using an external signal from a pulse sender water meter and it's necessary to dose the product quantity set specifing the MLQ (milliliters per quintal) and leaving the pump to manage the coming pulses.
BATCH	START: MANUAL QUANTITY: 10.0 L (Start icon for manual dosing)	START: EXTERNAL QUANTITY: 10.0 CONTACT: N.C. (or N.O.)	Manual mode: to dose a quantity at max frequency (manual start). External mode: signal from an external contact starts the pump to dose the amount product at max frequency.	This mode allows to start dosing after pump receives an external signal or manually.
VOLT	HIGH:10.0 V 999.9 L/H LOW: 0.0 V 0.0 L/H		In Voltage mode, the pump doses proportionally between the low and high voltage values. In VOLT working mode, voltage input value is shown on main menu (top/right).	This mode is used with controllers provided of a proportional output in voltage.

MA	HIGH:20.0 mA 999.9 L/H LOW: 0.0 mA 0.0 L/H		In mA mode, the pump doses proportionally between the low and high mA values. In mA working mode, mA input value is shown on main menu (top/right).	This mode is used with controllers provided of a proportional output in mA.
PULSE	HIGH:180 p/m 999.9 L/H LOW: 0 p/m 0.0 L/H		The pump doses proportionally between the low and high p/m values. In Pulse working mode, pulses number is shown on main menu (top/right).	This mode is used with controllers provided of an impulsive output
PAUSE-WORK	WORKING: 60 min (max 900) PAUSE: 60 min (max 900) QUANTITY: 999.9 L/h 100%		Pump doses the set quantity during working time. Pause-work cycle repeats regularly. Pause-work cycle starts with the working. In Home it will be displayed the quantity counter (top/right) during working session. If settings are incongruents (i.e.: quantity to dose in 60 min is over pump capacity), values are set automatically on max capacity at max frequency. % of capacity is based on Pump Capacity set.	In this mode the pump doses the set quantity (working frequency may not be less than 15%) during working time.
WEEKLY PROGRAMMING	◉ PROGRAM 1 ○ … ○ PROGRAM 24	Start: hh:mm Duration: 00h 00m Quantity: 2,5 l 15% ◉ Sunday ○ Monday ○ … ◉ Saturday	Set programs (up to 24). For each program set start time, duration, quantity to dose and days. Pump will dose the quantity starting at the time set. The duration cannot be over the day. Minimum quantity is calculated basing on pump capacity. Do not overlap programs.	This mode is used for weekly program pump dosing activity. Working frequency may not be less than 15%.

6.4 Partialized working mode

When pump flow rate is under 15% of max flow, the icon appears on display and the pump enters into partialized working mode: pump works at 30% of its capacity and partialize the working time until reach the requested amount.
Minimum flow rate is 1%. Under 1% pump does not work.

> QUICK SETTINGS

> FULL SETTINGS ▶ WORKING MODE

> INFO

SETUP ▶

SETUP

> PUMP CAPACITY

> TEST

> LEVEL ALARM

> STAND-BY

> WATER METER

SETUP

> TIMEOUT

> OVERFLOW

> UNIT OF MEASURE

> DATA & CLOCK

> LANGUAGE

SETUP

> POWER ON DELAY

> PASSWORD

> ALARM OUTPUT

> DISPLAY CONTRAST

> LOAD DEFAULT

	PARAMETERS TO SET		NOTE
PUMP CAPACITY	FLOW: 999.9 L/h CC/MIN: 16665.00 STROKE LENGTH: 100%		Pump capacity default setting is based on pump's label.
TEST	60 SEC		Run the test to verify pump capacity (max frequency)
LEVEL ALARM	STOP AFTER: 10.0 L		Level alarm is a pre-alarm on tank level. To delete the alarm, fill the tank. Level alarm set on "0 L" stops the pump.
STAND-BY	STAND-BY: STOP STAND-BY: ◉ CONTACT: N.O.	STAND-BY: DOSE CONTACT: N.O. QUANTITY: 149.9 l/h 15%	External signal connected to stand-by input can be used as: - Stand-by input (STOP), that can be enabled or disabled. - External signal input (DOSE). An external signal starts constant dosing of a certain amount per hour (QUANTITY). In this case, the working mode displayed is EXT CONSTANT. In both cases, you can set contact N.O. or N.C.
WATER METER	L/pulse: 1.0 [gal/pulse: 1.0]	pulse/L: 1.0 [pulse/gal: 1.0]	This menu allows to set water meter features. It is possible to enter the amount of pulse/litre or litre/pulse produced by the water meter. This value will determines the dosing rate in PPM / MLQ / PERCENTAGE working modes.
TIMEOUT	10 SEC		SET TIME AFTER WHICH, IF THE PUMP NO LONGER DETECTS INPUT PULSES, IT STOPS (MIN5, MAX120)
OVERFLOW	ALARM STOP	ALARM WORK	OVERFLOW generates an alarm (displayed in the main menu) that can stop or not the pump. Overflow can occur in PPM or PERCENTAGE or MLQ or BATCH working mode. In PPM or PERCENTAGE or MLQ overflow alarm occurs when dosing rate exceeds pump capacity. In BATCH working mode overflow alarm occurs when pump receives an external signal during dosing.
UNIT OF MEASURE	LITRES	GALLONS	
DATA & CLOCK	Format: dd/mm/yy 24 Date: Saturday 26/12/15 time: 04:01:19	Format: mm/dd/yy 12 Date: Saturday 12/26/15 time: 04:01:19 am	Changing Data & Clock, partial statistics will be resetted.
LANGUAGE	IT - EN - FR - DE - ES - PT		Choose language
POWER ON DELAY	00 min		POWER ON DELAY set a delay time at pump's power on. Delay time can be set from 0 to 10 minutes. It is possible to stop delay.

PASSWORD	ADMINISTRATOR PASSWORD New password: 0 _ _ _	> ADMINISTRATOR > USER	Pump default is without password. Insert password: the first time you set administrator password. Once set administrator password, you can choose a user password. Exit from this menu and enter again to set the user password. Reset password with LOAD DEFAULT.
ALARM OUTPUT	CONTACT N.C.(or N.O.) LEVEL ○ STAND BY ○ OVERFLOW ○	CONTACT N.C.(or N.O.) LEVEL ◉ STAND BY ◉ OVERFLOW ◉	ALARM OUTPUT manage the alarm output contact status (N.O. or N.C.): - level: product end; - stand-by: pump stop; - overflow: exceeding the operating frequency in PPM or PERCENTAGE or MLQ or receiving an external signal during dosing in BATCH working mode.
DISPLAY CONTRAST	▬		Regulate display brightness.
LOAD DEFAULT	YES	NO	Load default of all values at fabric values.
MODBUS (if requested)	ID: 1 BAUD RATE: 9600 FORMAT 8N1 (default)		Set the ID (1 to 255). Set the communication speed: 2400/4800/9600 /19200/38400/115200. Set the format.

6.5 Pump capacity setting

Pump capacity default setting is based on pump's label.

Values set in PUMP CAPACITY menu (FULL SETTINGS / SETUP / PUMP CAPACITY) are leading pump working mode.

NOTE:

The value set in "PUMP CAPACITY / STROKE LENGTH" does not change automatically by rotating the STROKE LENGTH KNOB.

CHECK THAT STROKE LENGTH KNOB HAS THE SAME VALUE SET IN "PUMP CAPACITY / STROKE LENGTH".

The pump could take up to 10 seconds before starts any operation (PRIMING, run TEST, etc).

It depends on motor ramp up to full speed.

> QUICK SETTINGS

> FULL SETTINGS

> INFO ▶ ALARMS ▶
RELEASE

To visualize alarms active, move on SETUP / INFO / ALARMS.

Icon ⚠ on main menu indicates one or more alarms active or stand-by.

Tab. 4. Alarms management

ALARM	PROBLEM	HOW MANAGE
LEVEL	End product	Refill the tank
OVER FLOW	Working frequency of the pump exceed the value on the label	Check settings Check pump capacity Turn off and on the pump
HIGH VOLT	Power voltage exceed the value on the label	Check power supply correspond to label If pump stop, turn off and on the pump
LOW VOLT	Power voltage is below the value on the label If in two minutes occur at least five LOW VOLT alarms, the pump stops	
PLANT FAULT	Pump or motor block.	Check and correct the problem. Turn off and on the pump or disconnect and reconnect the power supply.

7. MAINTENANCE

7.1 Maintenance schedule

Before start maitenance, the operator must be aware of safety precautions to prevent physical injury.

OPERATOR PROTECTION
Use safety equipment according to the company regulations.
Use this safety equipment within the work area during installation, service and when handling chemicals:

- **protective mask**
- **protective gloves**
- **safety goggles**
- **ear plugs or hear muffs**
- **further security device, if necessary.**

POWER SUPPLY DISCONNECTION
Always disconnect power to the motor before you perform any installation or maintenance tasks. Failure to disconnect power will result in serious physical injury.

Installation and maintenance tasks should be carried out by AUTHORIZED AND QUALIFIED PERSONNEL only in accordance with local regulations.

Before starting any maintenance or before long downtimes, drain the chemical from pump head.

Use original spare parts.

7.2 Maintenance inspection

A maintenance schedule includes these types of inspections:

- Routine maintenance and inspections
- Three-month inspections
- Annual inspections

Shorten the inspection intervals appropriately if the pumped chemical is abrasive or corrosive.

Routine maitenance and inspections

Perform these tasks whenever you perform routine maintenance:

- Inspect the seal. Ensure that there are no leaks from the mechanical seal.
- Check electrical wiring
- Check the level and condition of the oil through the sight glass
- Check for unusual noise and vibration (noise allowed 78 dbA; ± 5 dB).
- Check the pump and piping for leaks.
- Inspect the discharge pressure.
- Check temperature (motor temperature max 70°C; pump head max 40°C)
- Check for corrosion on parts of the pump and / or on hoses.

Three-month inspections

Perform these tasks every three months:

- Check that the bolts are tight.
- Check the mechanical seal if the pump has been left idle.

Annual inspections

Perform these inspections one time each year:

- Check the pump capacity (as per nameplate).
- Check the pump pressure (as per nameplate).
- Check the pump power (as per nameplate).
- Change the oil every year (8.000-10.000 operating hours).
- Change the oil more often if there are adverse conditions

If the pump performance does not satisfy your process requirements, and the process requirements have not changed, then perform these steps:

1. Disassemble the pump.
2. Inspect it.
3. Replace worn parts.

7.3 Shutdown procedure

This procedure SHOULD BE CARRIED OUT BY AUTHORIZED AND QUALIFIED PERSONNEL

OPERATOR PROTECTION
Use safety equipment according to the company regulations.
Use this safety equipment within the work area during installation, service and when handling chemicals:

- **protective mask**
- **protective gloves**
- **safety goggles**
- **ear plugs or hear muffs**
- **further security device, if necessary.**

Shutdown the dosing pump **before any maintenance operation** or **before long downtimes**.
Disconnect power to the motor and ensure it cannot be restarted.

Depressurize the system. The liquid may leak splashing.

Drain the chemical from pump head.
Release the pressure.
Rinse the pump head and clean all valves.

7.4 Display battery replacement procedure

POWER SUPPLY DISCONNECTION
Always disconnect power to the motor before you perform this procedure. Failure to disconnect power will result in serious physical injury.

This procedure should be carried out by AUTHORIZED AND QUALIFIED PERSONNEL only in accordance with local regulations.

- Disconnect power supply.
- Unscrew the 4 screws under the pump and remove the base.
- Locate the battery slot behind display.
- With a screwdrive push the battery out of its slot.
- Replace with a new one (3V) respecting polarity (+/-) as shown on the slot.
- Close the base with the 4 screws.

8. ELECTRICAL WIRING

8.1 Preliminary checks

The electrical wirings should be carried out by AUTHORIZED AND QUALIFIED PERSONNEL only in accordance with local regulations.

Before to proceed, verify the following steps:

1. **Verify the data on nameplate.**
   Make sure that the electrical data on the nameplate of the motor corresponds to the electrical supply.

2. **Verify the grounded power outlet.**
   The pump must be plugged to a grounded power outlet.

3. **Install a motor protection switch.**
   Pump must be connected to a motor protection switch (Residual Current Circuit Breaker - MCCB).

4. **Verify the cable.**
   Cable type and cross-section must be in accordance to motor data.

5. **Verify the motor rotation.**
   Start up the pump to check the motor's direction of rotation. It must comply with that indicated by the arrow marked on the motor fan cover. If the direction is reversed, rewire the motor power wires in accordance with the wiring diagram, refer to "3.2 Connection diagrams".

8.2 Connection diagrams

CONNECTION DIAGRAMS for 3~PHASE MOTOR

"Δ " (DELTA) CONNECTION

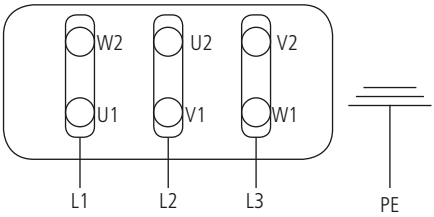

9. TROUBLESHOOTING

Tab. 5. Guide to troubleshooting.

PROBLEM	CAUSE	REMEDY
Dosing pump not delivering or output too low	Suction valve leaking or blocked	Clean or replace suction valve
	Suction pipe leaking or blocked	Replace suction pipe
	Air bubbles into pump head or into suction pipe	Prime the pump as described in "5.1 How to prime the pump" page 21
	Viscosity too high	Increase the pipe diameter or contact manufacturer
	Suction lift too high	Decrease lift
	Foot filter obstruction	Clean the foot filter
Motor and pump head too hot	Wrong wiring or defecting contact	Check wiring
	Pressure too high	Install a valve
	Delivery pipe obstructed or blocked	Clean delivery pipe
	Low level oil	Refill oil
Liquid loss	Plunger o-ring damaged	Contact manufacturer for replacement
Display is lighted but no text appear	Display battery low	Replace display battery. Display battery is located on the circuit board under the display.

If the problem can not be solved, please contact after-sales service or return the dosing pump to the manufacturer.

9.1 Repair service

Before return the dosing pump to the manufacturer Repair service, drain the chemical from pump head and rinse it.
If there is the possibility that residual corrosive liquid into pump head could cause damages, declare it on REPAIR FORM.

Remove oil and replace operating cap with the blind cap.

Complete the PRODUCT SERVICE REPAIR FORM and send it with the dosing pump.
Repair service is not accepted if PRODUCT SERVICE REPAIR FORM is missing.

10. COMPATIBILITY TABLE

10.1 Chemical compatibility table

Metering pumps are widely used to dose chemical fluids and it is important that the most suitable material in contact with fluid is selected for each application. This compatibility table serves as a useful help in this respect. All the informations in this list are verified periodically and believed to be correct on the date of issuance. All the informations in this list are based on manufacturer's data and its own experience but since the resistance of any material depends by several factors this list is supplied only as an initial guide, in no way manufacturer makes warranties of any matter respect to the informations provided in this list.

Tab. 6. Chemical compatibility table.

Product	Formula	Ceram.	PVDF	PP	PVC	SS 316	PMMA	Hastel.	PTFE	FPM	EPDM	NBR	PE
Acetic Acid, Max 75%	CH3COOH	2	1	1	1	1	3	1	1	3	1	3	1
Hydrochloric Acid, Concentrate	HCl	1	1	1	1	3	1	1	1	1	3	3	1
Hydrofluoric Acid 40%	H2F2	3	1	3	2	3	3	2	1	1	3	3	1
Phosphoric Acid, 50%	H3PO4	1	1	1	1	2	1	1	1	1	1	3	1
Nitric Acid, 65%	HNO3	1	1	2	3	2	3	1	1	1	3	3	2
Sulphuric Acid, 85%	H2SO4	1	1	1	1	2	3	1	1	1	3	3	1
Sulphuric Acid, 98.5%	H2SO4	1	1	3	3	3	3	1	1	1	3	3	3
Amines	R-NH2	1	2	1	3	1	-	1	1	3	3	1	1
Sodium Bisulphite	NaHSO3	1	1	1	1	2	1	1	1	1	1	1	1
Sodium Carbonate (Soda)	Na2CO3	2	1	1	1	1	1	1	1	2	1	1	1
Ferric Chloride	FeCl3	1	1	1	1	3	1	1	1	1	1	1	1
Calcium Hydroxide (Slaked Lime)	Ca(OH)2	1	1	1	1	1	1	1	1	1	1	1	1
Sodium Hydroxide (Caustic Soda)	NaOH	2	3	1	1	1	1	1	1	2	1	2	1
Calcium Hypochlor.(Chlor. ted Lime)	Ca(OCl)2	1	1	1	1	3	1	1	1	1	1	3	1
Sodium Hypochlorite, 12.5%	NaOCl + NaCl	1	1	2	1	3	1	1	1	1	1	2	3
Potassium Permanganate, 10%	KMnO4	1	1	1	1	1	1	1	1	1	1	3	1
Hydrogen Peroxide, 30% (Perydrol)	H2O2	1	1	1	1	1	3	1	1	1	3	3	1
Aluminium Sulphate	Al2(SO4)3	1	1	1	1	1	1	1	1	1	1	1	1
Copper-II-Sulphate (Roman Vitriol)	CuSO4	1	1	1	1	1	1	1	1	1	1	1	1

1 - Good resistance rating

2 - Fairly resistance rating

3- Not resistant

10.2 Materials

Polyvinyldene fluoride (PVDF) .....Pump heads, Valves, Fittings
Polypropylene (PP).....Pump heads, Valves, Fittings
PVC .....Pump heads
Stainless steel (SS 316).....Pump heads, Valves
Polymethyl Metacrilate Acrylic (PMMA) .....Pump heads
Ceramic (SIALOX96) or Stainless steel (AISI 420).....Plunger
Fluorocarbon (FPM).....O-ring
Ethylene propylene (EPDM).....O-ring
Nitrile (NBR).....O-ring

PRODUCT SERVICE REPAIR FORM

ENCLOSE THE PRESENT FORM TO THE DELIVERY NOTE

DATE .....

SENDER

Company name.....

Address .....

Phone no. .....

Contact person.....

PRODUCT TYPE (see product label)

DEVICE CODE .....

S/N (serial number).....

OPERATING CONDITIONS

Location/installation description .....

.....

Chemical .....

Start-up (date) ..... Running time (approx. hours).....

REMOVE ALL THE LIQUID INTO THE PUMP HEAD AND DRY IT BEFORE PACKAGING IN ITS ORIGINAL BOX.

DESCRIPTION OF PROBLEM

☐ MECHANICAL

- Wear parts.....
- Brekage/other damages .....
- Corrosion.....
- Other.....

☐ ELECTRICAL

- Connections, connector, cables .....
- Operating controls (keyboard, display, etc.) .....
- Elettronics.....
- Other.....

☐ LEAKS

- Connections.....
- Pump head .....

☐ NOT OR INADEQUATE FUNCTION/OTHER

.....

.....

.....

I declare that the dosing pump is free of any hazardous chemical.

Signature of the compiler

Company stamp

PRECAUTIONS RELATING TO DIRECTIVES, REGULATIONS AND STANDARDS

§ CE/EU and UKCA marking

We guarantee that this product meets the essential requirements of the applicable Directives and Regulations based on the following specifications. Please carefully consider the following specifications for use of the product in European Union member countries and the United Kingdom.

• CE/EU harmonized directives and standards

Directives
DIRECTIVE 2006/42/EC
DIRECTIVE 2014/35/EU
DIRECTIVE 2014/30/EU
DIRECTIVE 2011/65/EU
DELEGATED DIRECTIVE (EU) 2015/863

Harmonized standards
EN ISO 12100
EN 809
EN ISO 20361
EN IEC 61326-1
EN 61010-1
EN IEC 63000

• UKCA harmonized regulations and standards

Regulations
2008 No. 1597
2008 2016 No. 1091
2016 No. 1101
2012 No. 3032

Harmonized standards
BS EN ISO 12100
BS EN 809
BS EN ISO 20361
BS EN IEC 61326-1
BS EN 61010-1
BS EN IEC 63000

§ Other compliances

Decree 6 April 2004, n. 174 of the Ministry of Health (Gazzetta Ufficiale n. 166 of 17-7-2004)
Decree 7 February 2012, n.25 of the Ministry of Health (Gazzetta Ufficiale n. 166 of 17-7-2004)

Disposal of end-of-life equipment by users

This symbol warns you not to dispose of the product with normal waste. Respect human health and the environment by giving the discarded equipment to a designated collection center for the recycling of electronic and electrical equipment. For more information visit the online site.

When dismantling a pump please separate material types and send them according to local recycling disposal requirements. We appreciate your efforts in supporting your local Recycle Environmental Program. Working together we'll form an active union to assure the world's invaluable resources are conserved.