Series\PRIUS D 50 Hz

Diaphragm motor-driven dosing pumps

PRIUS series of motor-driven dosing pumps have been entirely designed and manufactured by EMEC to meet higher level requirements.
PRIUS D 50 Hz pumps with constant dosing are equipped with PTFE diaphragm and are also available in the AP version for high pressures and with three-phase or single-phase (Mono) motor.
ATEX certified models are allowed to be used in potentially explosive atmospheres.

R3-10-22

PERFORMANCE

1000 l/h

100 bar

POWER SUPPLY

380 VAC

220 VAC

115 VAC

VENTING

MANUAL

SELF

Via Donatori di Sangue, 1 - 02100 Rieti (Italy)
+39 074622841 | emecpumps.com

Specifications subject to change without notice | R2025

emec
SIMPLE AS WATER

IQNET CERTIFIED MANAGEMENT SYSTEM
qualityaustria SYSTEM CERTIFIED
ISO 9001:2015 No.07728/0
ISO 14001:2015 No.00997/0
ISO 45001:2018 No.01121/0

FEATURES

- Horizontal mounting
- Aluminium enclosure
- Spring return mechanism
- Double ball check valve (where available)
- Manual stroke length adjustment
- Flow rate adjustment from 0 to 100% with manual adjustment on the knob
- Liquid ends available in different sizes and materials
- Tropicalized motor
- Available with ATEX certification

INSTALLATION

- Kit installation A included
- Kits installation B and C sold separately
- The pump with pump head in AISI316L does not have accessories for installation

LUBRICANT TYPE	
BRAND	**MODEL**
MOBIL	MOBILGEAR 632
SHELL	OMALA OIL 320
BP	ENERGOL GR-XP 320
IP	MELLANA OIL 320
ESSO	SPARTAN EP 320
AGIP	BLASIA 320

PUMP HEADS

PVDF

PP

AISI316

Via Donatori di Sangue, 1 - 02100 Rieti (Italy)
+39 074622841 | emecpumps.com

Specifications subject to change without notice | R2025

emec
SIMPLE AS WATER

IQNET CERTIFIED MANAGEMENT SYSTEM
qualityaustria SYSTEM CERTIFIED
ISO 9001:2015 No.07728/0
ISO 14001:2015 No.00997/0
ISO 45001:2018 No.01121/0

Series\PRIUS D 50 Hz

Diaphragm motor-driven dosing pumps

technical data
manuals
datasheets
exploded-views

PRIUS D 50 Hz

Diaphragm pump with constant dosing

FEATURES
- PTFE diaphragm
- Manual stroke length adjustment
- Liquid ends available in different sizes and materials

FUNCTIONS
- Constant dosing

MOTORS

0,37 kW 220/380 V 3-phase
0,18 kW 220/380 V 3-phase
0,55 kW 220/380 V 3-phase

PRIUS D 50 Hz Mono

Diaphragm pump with constant dosing and single-phase motor

FEATURES
- PTFE diaphragm
- Manual stroke length adjustment
- Liquid ends available in different sizes and materials
- Single-phase motor

FUNCTIONS
- Constant dosing

MOTORS

0,37 kW 220 V single-phase
0,55 kW 220 V single-phase

PRIUS D 50Hz AP

Diaphragm pump with constant dosing for high pressure

FEATURES
- PTFE diaphragm
- Manual stroke length adjustment
- Liquid ends available in different sizes and materials
- For high pressure

FUNCTIONS
- Constant dosing

MOTORS

0,37 kW 220/380 V 3-phase

PRIUS D 50Hz AP Mono

Diaphragm pump for high pressure with single-phase motor

FEATURES
- PTFE diaphragm
- Manual stroke length adjustment
- Liquid ends available in different sizes and materials
- For high pressure
- Single-phase motor

FUNCTIONS
- Constant dosing

MOTORS

0,37 kW 220 V single-phase
0,55 kW 220 V single-phase

Via Donatori di Sangue, 1 - 02100 Rieti (Italy)
+39 074622841 | emecpumps.com

Specifications subject to change without notice | R2025

emec SIMPLE AS WATER

IQNET CERTIFIED MANAGEMENT SYSTEM
qualityaustria SYSTEM CERTIFIED
ISO 9001:2015 No.07728/0
ISO 14001:2015 No.00997/0
ISO 45001:2018 No.01121/0

ATEX - Category 2

Category 2		
Installation areas liable to be endangered by explosive atmospheres.	Pumps intended for use in areas in which explosive atmospheres are likely to occur.	
	G (gas)	D (dust)
1999/92/EC	Zone 1	Zone 21

- Explosive atmospheres consists of air and combustible matter, such as gases, vapours, mists or dusts in which the explosion spreads after ignition.
- Atex pumps are designed in accordance with ATEX directive 2014/34/EU and can be used in areas (zones) classified according to ATEX directive 1999/92/CE.
- Stainless steel liquid ends AISI 316 (L).

ATEX - Category 3

Category 3		
Installation areas liable to be endangered by explosive atmospheres.	Pumps intended for use in areas in which explosive atmospheres only rarely occur.	
	G (gas)	D (dust)
1999/92/EC	Zone 2	Zone 22

- Explosive atmospheres consists of air and combustible matter, such as gases, vapours, mists or dusts in which the explosion spreads after ignition.
- Atex pumps are designed in accordance with ATEX directive 2014/34/EU and can be used in areas (zones) classified according to ATEX directive 1999/92/CE.

PRIUS D 50Hz Series | STANDARD

PRIUS D 50Hz THREE-PHASE

bar	l/h	Pump Head				Motor	PVDF	Installation Kit
		model	stroke (mm)	SPM	reduction	kW	hoses connection	
10	60	NM	3	175	8:1	0,18	G 1/2" 13 mm (i.d.)	A
10	30	NM	3	94	15:1	0,18	G 1/2" 13 mm (i.d.)	A
10	24	NM	3	70	20:1	0,18	G 1/2" 13 mm (i.d.)	A
10	12	NM	3	35	40:1	0,18	G 1/2" 13 mm (i.d.)	A
10	16	NM	4	35	40:1	0,18	G 1/2" 13 mm (i.d.)	A
10	105	TM	3	175	8:1	0,37	G 3/4" 13 mm (i.d.)	A
10	56	TM	3	94	15:1	0,37	G 3/4" 13 mm (i.d.)	A
10	42	TM	3	70	20:1	0,37	G 3/4" 13 mm (i.d.)	A
10	21	TM	3	35	40:1	0,37	G 3/4" 13 mm (i.d.)	A
7	160	TM	4	175	8:1	0,37	G 3/4" 13 mm (i.d.)	A
7	86	TM	4	94	15:1	0,37	G 3/4" 13 mm (i.d.)	A
7	64	TM	4	70	20:1	0,37	G 3/4" 13 mm (i.d.)	A
7	32	TM	4	35	40:1	0,37	G 3/4" 13 mm (i.d.)	A
5	240	TM	6	175	8:1	0,37	G 3/4" 18 mm (i.d.)	B
5	128	TM	6	94	15:1	0,37	G 3/4" 18 mm (i.d.)	B
5	96	TM	6	70	20:1	0,37	G 3/4" 18 mm (i.d.)	B
5	48	TM	6	35	40:1	0,37	G 3/4" 18 mm (i.d.)	B
2	1000	UMS	10	175	8:1	0,37	G 1 1/2" 30 mm (i.d.)	C
5	1000	UMS	10	175	8:1	0,55	G 1 1/2" 30 mm (i.d.)	C
5	520	UMS	10	94	15:1	0,37	G 1 1/2" 30 mm (i.d.)	C
4	520	UMS	10	94	15:1	0,37	G 1 1/2" 30 mm (i.d.)	C
5	390	UMS	10	70	20:1	0,37	G 1 1/2" 30 mm (i.d.)	C
5	180	UMS	10	35	40:1	0,37	G 1 1/2" 30 mm (i.d.)	C
5	350	UMS	4	175	8:1	0,37	G 1 1/2" 30 mm (i.d.)	C
5	188	UMS	4	94	15:1	0,37	G 1 1/2" 30 mm (i.d.)	C
5	140	UMS	4	70	20:1	0,37	G 1 1/2" 30 mm (i.d.)	C
5	70	UMS	4	35	40:1	0,37	G 1 1/2" 30 mm (i.d.)	C
5	440	UMS	5	175	8:1	0,37	G 1 1/2" 30 mm (i.d.)	C
5	236	UMS	5	94	15:1	0,37	G 1 1/2" 30 mm (i.d.)	C
5	176	UMS	5	70	20:1	0,37	G 1 1/2" 30 mm (i.d.)	C
5	88	UMS	5	35	40:1	0,37	G 1 1/2" 30 mm (i.d.)	C
5	530	UMS	6	175	8:1	0,37	G 1 1/2" 30 mm (i.d.)	C
5	284	UMS	6	94	15:1	0,37	G 1 1/2" 30 mm (i.d.)	C
5	212	UMS	6	70	20:1	0,37	G 1 1/2" 30 mm (i.d.)	C
5	106	UMS	6	35	40:1	0,37	G 1 1/2" 30 mm (i.d.)	C
3	750	UMS	8	175	8:1	0,37	G 1 1/2" 30 mm (i.d.)	C
5	750	UMS	8	175	8:1	0,55	G 1 1/2" 30 mm (i.d.)	C
5	380	UMS	8	94	15:1	0,37	G 1 1/2" 30 mm (i.d.)	C
5	290	UMS	8	70	20:1	0,37	G 1 1/2" 30 mm (i.d.)	C
5	141	UMS	8	35	40:1	0,37	G 1 1/2" 30 mm (i.d.)	C

PRIUS D 50Hz Series | STANDARD

PRIUS D 50Hz THREE-PHASE

bar	l/h	Pump Head				Motor	AISI 316L	Installation Kit
		model	stroke (mm)	SPM	reduction	kW	hoses connection	
10	60	NM	3	175	8:1	0,18	R 1/2″	A
10	30	NM	3	94	15:1	0,18	R 1/2″	A
10	24	NM	3	70	20:1	0,18	R 1/2″	A
10	12	NM	3	35	40:1	0,18	R 1/2″	A
10	16	NM	4	35	40:1	0,18	R 1/2″	A
10	105	TM	3	175	8:1	0,37	R 3/4″	A
10	56	TM	3	94	15:1	0,37	R 3/4″	A
10	42	TM	3	70	20:1	0,37	R 3/4″	A
10	21	TM	3	35	40:1	0,37	R 3/4″	A
7	160	TM	4	175	8:1	0,37	R 3/4″	A
7	86	TM	4	94	15:1	0,37	R 3/4″	A
7	64	TM	4	70	20:1	0,37	R 3/4″	A
7	32	TM	4	35	40:1	0,37	R 3/4″	A
5	240	TM	6	175	8:1	0,37	R 3/4″	B
5	128	TM	6	94	15:1	0,37	R 3/4″	B
5	96	TM	6	70	20:1	0,37	R 3/4″	B
5	48	TM	6	35	40:1	0,37	R 3/4″	B
2	1000	UMS	10	175	8:1	0,37	R 1″	C
5	1000	UMS	10	175	8:1	0,55	R 1″	C
5	520	UMS	10	94	15:1	0,37	R 1″	C
4	520	UMS	10	94	15:1	0,37	R 1″	C
5	390	UMS	10	70	20:1	0,37	R 1″	C
5	180	UMS	10	35	40:1	0,37	R 1″	C
5	350	UMS	4	175	8:1	0,37	R 1″	C
5	188	UMS	4	94	15:1	0,37	R 1″	C
5	140	UMS	4	70	20:1	0,37	R 1″	C
5	70	UMS	4	35	40:1	0,37	R 1″	C
5	440	UMS	5	175	8:1	0,37	R 1″	C
5	236	UMS	5	94	15:1	0,37	R 1″	C
5	176	UMS	5	70	20:1	0,37	R 1″	C
5	88	UMS	5	35	40:1	0,37	R 1″	C
5	530	UMS	6	175	8:1	0,37	R 1″	C
5	284	UMS	6	94	15:1	0,37	R 1″	C
5	212	UMS	6	70	20:1	0,37	R 1″	C
5	106	UMS	6	35	40:1	0,37	R 1″	C
3	750	UMS	8	175	8:1	0,37	R 1″	C
5	750	UMS	8	175	8:1	0,55	R 1″	C
5	380	UMS	8	94	15:1	0,37	R 1″	C
5	290	UMS	8	70	20:1	0,37	R 1″	C
5	141	UMS	8	35	40:1	0,37	R 1″	C

PRIUS D 50Hz Series | STANDARD

PRIUS D 50Hz THREE-PHASE

bar	l/h	Pump Head				Motor	PP	Installation Kit
		model	stroke (mm)	SPM	reduction	kW	hoses connection	
10	60	NM	3	175	8:1	0,18	G 1/2" 13 mm (i.d.)	A
10	30	NM	3	94	15:1	0,18	G 1/2" 13 mm (i.d.)	A
10	24	NM	3	70	20:1	0,18	G 1/2" 13 mm (i.d.)	A
10	12	NM	3	35	40:1	0,18	G 1/2" 13 mm (i.d.)	A
10	16	NM	4	35	40:1	0,18	G 1/2" 13 mm (i.d.)	A
10	105	TM	3	175	8:1	0,37	G 3/4" 13 mm (i.d.)	A
10	56	TM	3	94	15:1	0,37	G 3/4" 13 mm (i.d.)	A
10	42	TM	3	70	20:1	0,37	G 3/4" 13 mm (i.d.)	A
10	21	TM	3	35	40:1	0,37	G 3/4" 13 mm (i.d.)	A
7	160	TM	4	175	8:1	0,37	G 3/4" 13 mm (i.d.)	A
7	86	TM	4	94	15:1	0,37	G 3/4" 13 mm (i.d.)	A
7	64	TM	4	70	20:1	0,37	G 3/4" 13 mm (i.d.)	A
7	32	TM	4	35	40:1	0,37	G 3/4" 13 mm (i.d.)	A
5	240	TM	6	175	8:1	0,37	G 3/4" 18 mm (i.d.)	B
5	128	TM	6	94	15:1	0,37	G 3/4" 18 mm (i.d.)	B
5	96	TM	6	70	20:1	0,37	G 3/4" 18 mm (i.d.)	B
5	48	TM	6	35	40:1	0,37	G 3/4" 18 mm (i.d.)	B
2	1000	UMS	10	175	8:1	0,37	G 1 1/2" 30 mm (i.d.)	C
5	1000	UMS	10	175	8:1	0,55	G 1 1/2" 30 mm (i.d.)	C
5	520	UMS	10	94	15:1	0,37	G 1 1/2" 30 mm (i.d.)	C
4	520	UMS	10	94	15:1	0,37	G 1 1/2" 30 mm (i.d.)	C
5	390	UMS	10	70	20:1	0,37	G 1 1/2" 30 mm (i.d.)	C
5	180	UMS	10	35	40:1	0,37	G 1 1/2" 30 mm (i.d.)	C
5	350	UMS	4	175	8:1	0,37	G 1 1/2" 30 mm (i.d.)	C
5	188	UMS	4	94	15:1	0,37	G 1 1/2" 30 mm (i.d.)	C
5	140	UMS	4	70	20:1	0,37	G 1 1/2" 30 mm (i.d.)	C
5	70	UMS	4	35	40:1	0,37	G 1 1/2" 30 mm (i.d.)	C
5	440	UMS	5	175	8:1	0,37	G 1 1/2" 30 mm (i.d.)	C
5	236	UMS	5	94	15:1	0,37	G 1 1/2" 30 mm (i.d.)	C
5	176	UMS	5	70	20:1	0,37	G 1 1/2" 30 mm (i.d.)	C
5	88	UMS	5	35	40:1	0,37	G 1 1/2" 30 mm (i.d.)	C
5	530	UMS	6	175	8:1	0,37	G 1 1/2" 30 mm (i.d.)	C
5	284	UMS	6	94	15:1	0,37	G 1 1/2" 30 mm (i.d.)	C
5	212	UMS	6	70	20:1	0,37	G 1 1/2" 30 mm (i.d.)	C
5	106	UMS	6	35	40:1	0,37	G 1 1/2" 30 mm (i.d.)	C
3	750	UMS	8	175	8:1	0,37	G 1 1/2" 30 mm (i.d.)	C
5	750	UMS	8	175	8:1	0,55	G 1 1/2" 30 mm (i.d.)	C
5	380	UMS	8	94	15:1	0,37	G 1 1/2" 30 mm (i.d.)	C
5	290	UMS	8	70	20:1	0,37	G 1 1/2" 30 mm (i.d.)	C
5	141	UMS	8	35	40:1	0,37	G 1 1/2" 30 mm (i.d.)	C

PRIUS D 50Hz Series | STANDARD

PRIUS D 50Hz SINGLE-PHASE

bar	l/h	Pump Head				Motor	PVDF	Installation Kit
		model	stroke (mm)	SPM	reduction	kW	hoses connection	
10	60	NM	3	175	8:1	0,37	G 1/2" 13 mm (i.d.)	A
10	30	NM	3	94	15:1	0,37	G 1/2" 13 mm (i.d.)	A
10	24	NM	3	70	20:1	0,37	G 1/2" 13 mm (i.d.)	A
10	12	NM	3	35	40:1	0,37	G 1/2" 13 mm (i.d.)	A
10	105	TM	3	175	8:1	0,37	G 3/4" 13 mm (i.d.)	A
10	56	TM	3	94	15:1	0,37	G 3/4" 13 mm (i.d.)	A
10	42	TM	3	70	20:1	0,37	G 3/4" 13 mm (i.d.)	A
10	21	TM	3	35	40:1	0,37	G 3/4" 13 mm (i.d.)	A
7	160	TM	4	175	8:1	0,37	G 3/4" 13 mm (i.d.)	A
7	86	TM	4	94	15:1	0,37	G 3/4" 13 mm (i.d.)	A
7	64	TM	4	70	20:1	0,37	G 3/4" 13 mm (i.d.)	A
7	32	TM	4	35	40:1	0,37	G 3/4" 13 mm (i.d.)	A
5	240	TM	6	175	8:1	0,37	G 3/4" 18 mm (i.d.)	B
5	128	TM	6	94	15:1	0,37	G 3/4" 18 mm (i.d.)	B
5	96	TM	6	70	20:1	0,37	G 3/4" 18 mm (i.d.)	B
5	48	TM	6	35	40:1	0,37	G 3/4" 18 mm (i.d.)	B
5	350	UMS	4	175	8:1	0,55	G 1 1/2" 30 mm (i.d.)	C
5	188	UMS	4	94	15:1	0,37	G 1 1/2" 30 mm (i.d.)	C
5	140	UMS	4	70	20:1	0,37	G 1 1/2" 30 mm (i.d.)	C
5	70	UMS	4	35	40:1	0,37	G 1 1/2" 30 mm (i.d.)	C
5	440	UMS	5	175	8:1	0,55	G 1 1/2" 30 mm (i.d.)	C
5	236	UMS	5	94	15:1	0,37	G 1 1/2" 30 mm (i.d.)	C
5	176	UMS	5	70	20:1	0,37	G 1 1/2" 30 mm (i.d.)	C
5	88	UMS	5	35	40:1	0,37	G 1 1/2" 30 mm (i.d.)	C
5	530	UMS	6	175	8:1	0,55	G 1 1/2" 30 mm (i.d.)	C
5	284	UMS	6	94	15:1	0,37	G 1 1/2" 30 mm (i.d.)	C
5	212	UMS	6	70	20:1	0,37	G 1 1/2" 30 mm (i.d.)	C
5	106	UMS	6	35	40:1	0,37	G 1 1/2" 30 mm (i.d.)	C

PRIUS D 50Hz Series | STANDARD

PRIUS D 50Hz SINGLE-PHASE

bar	l/h	Pump Head				Motor	AISI 316L	Installation Kit
		model	stroke (mm)	SPM	reduction	kW	hoses connection	
10	60	NM	3	175	8:1	0,37	R 1/2″	A
10	30	NM	3	94	15:1	0,37	R 1/2″	A
10	24	NM	3	70	20:1	0,37	R 1/2″	A
10	12	NM	3	35	40:1	0,37	R 1/2″	A
10	105	TM	3	175	8:1	0,37	R 3/4″	A
10	56	TM	3	94	15:1	0,37	R 3/4″	A
10	42	TM	3	70	20:1	0,37	R 3/4″	A
10	21	TM	3	35	40:1	0,37	R 3/4″	A
7	160	TM	4	175	8:1	0,37	R 3/4″	A
7	86	TM	4	94	15:1	0,37	R 3/4″	A
7	64	TM	4	70	20:1	0,37	R 3/4″	A
7	32	TM	4	35	40:1	0,37	R 3/4″	A
5	240	TM	6	175	8:1	0,37	R 3/4″	B
5	128	TM	6	94	15:1	0,37	R 3/4″	B
5	96	TM	6	70	20:1	0,37	R 3/4″	B
5	48	TM	6	35	40:1	0,37	R 3/4″	B
5	350	UMS	4	175	8:1	0,55	R 1″	C
5	188	UMS	4	94	15:1	0,37	R 1″	C
5	140	UMS	4	70	20:1	0,37	R 1″	C
5	70	UMS	4	35	40:1	0,37	R 1″	C
5	440	UMS	5	175	8:1	0,55	R 1″	C
5	236	UMS	5	94	15:1	0,37	R 1″	C
5	176	UMS	5	70	20:1	0,37	R 1″	C
5	88	UMS	5	35	40:1	0,37	R 1″	C
5	530	UMS	6	175	8:1	0,55	R 1″	C
5	284	UMS	6	94	15:1	0,37	R 1″	C
5	212	UMS	6	70	20:1	0,37	R 1″	C
5	106	UMS	6	35	40:1	0,37	R 1″	C

PRIUS D 50Hz Series | STANDARD

PRIUS D 50Hz SINGLE-PHASE

bar	l/h	Pump Head				Motor	PP	Installation Kit
		model	stroke (mm)	SPM	reduction	kW	hoses connection	
10	60	NM	3	175	8:1	0,37	G 1/2" 13 mm (i.d.)	A
10	30	NM	3	94	15:1	0,37	G 1/2" 13 mm (i.d.)	A
10	24	NM	3	70	20:1	0,37	G 1/2" 13 mm (i.d.)	A
10	12	NM	3	35	40:1	0,37	G 1/2" 13 mm (i.d.)	A
10	105	TM	3	175	8:1	0,37	G 3/4" 13 mm (i.d.)	A
10	56	TM	3	94	15:1	0,37	G 3/4" 13 mm (i.d.)	A
10	42	TM	3	70	20:1	0,37	G 3/4" 13 mm (i.d.)	A
10	21	TM	3	35	40:1	0,37	G 3/4" 13 mm (i.d.)	A
7	160	TM	4	175	8:1	0,37	G 3/4" 13 mm (i.d.)	A
7	86	TM	4	94	15:1	0,37	G 3/4" 13 mm (i.d.)	A
7	64	TM	4	70	20:1	0,37	G 3/4" 13 mm (i.d.)	A
7	32	TM	4	35	40:1	0,37	G 3/4" 13 mm (i.d.)	A
5	240	TM	6	175	8:1	0,37	G 3/4" 18 mm (i.d.)	B
5	128	TM	6	94	15:1	0,37	G 3/4" 18 mm (i.d.)	B
5	96	TM	6	70	20:1	0,37	G 3/4" 18 mm (i.d.)	B
5	48	TM	6	35	40:1	0,37	G 3/4" 18 mm (i.d.)	B
5	350	UMS	4	175	8:1	0,55	G 1 1/2" 30 mm (i.d.)	C
5	188	UMS	4	94	15:1	0,37	G 1 1/2" 30 mm (i.d.)	C
5	140	UMS	4	70	20:1	0,37	G 1 1/2" 30 mm (i.d.)	C
5	70	UMS	4	35	40:1	0,37	G 1 1/2" 30 mm (i.d.)	C
5	440	UMS	5	175	8:1	0,55	G 1 1/2" 30 mm (i.d.)	C
5	236	UMS	5	94	15:1	0,37	G 1 1/2" 30 mm (i.d.)	C
5	176	UMS	5	70	20:1	0,37	G 1 1/2" 30 mm (i.d.)	C
5	88	UMS	5	35	40:1	0,37	G 1 1/2" 30 mm (i.d.)	C
5	530	UMS	6	175	8:1	0,55	G 1 1/2" 30 mm (i.d.)	C
5	284	UMS	6	94	15:1	0,37	G 1 1/2" 30 mm (i.d.)	C
5	212	UMS	6	70	20:1	0,37	G 1 1/2" 30 mm (i.d.)	C
5	106	UMS	6	35	40:1	0,37	G 1 1/2" 30 mm (i.d.)	C

PRIUS D 50Hz Series | HIGH PRESSURE

PRIUS D 50Hz AP THREE-PHASE

bar	l/h	Pump Head				Motor	PVDF	Installation Kit
		model	stroke (mm)	SPM	reduction	kW	hoses connection	
20	30	NM AP	2	175	8:1	0,37	8x10 (PVDF) / 8x12 (PVC)	●
20	16	NM AP	2	94	15:1	0,37	8x10 (PVDF) / 8x12 (PVC)	●
20	12	NM AP	2	70	20:1	0,37	8x10 (PVDF) / 8x12 (PVC)	●
20	6	NM AP	2	35	40:1	0,37	8x10 (PVDF) / 8x12 (PVC)	●

PRIUS D 50Hz AP THREE-PHASE

bar	l/h	Pump Head				Motor	AISI 316L	Installation Kit
		model	stroke (mm)	SPM	reduction	kW	hoses connection	
100	4	LM AP	1,5	175	8:1	0,37	R 3/8″	●
100	2	LM AP	1,5	94	15:1	0,37	R 3/8″	●
100	1,5	LM AP	1,5	70	20:1	0,37	R 3/8″	●
50	17	MM AP	2	175	8:1	0,37	R 1/2″	●
50	9	MM AP	2	94	15:1	0,37	R 1/2″	●
50	5	MM AP	2	70	20:1	0,37	R 1/2″	●
50	2,5	MM AP	2	35	40:1	0,37	R 1/2″	●
30	28	MM AP	2	175	8:1	0,37	R 1/2″	●
30	14	MM AP	2	94	15:1	0,37	R 1/2″	●
30	10	MM AP	2	70	20:1	0,37	R 1/2″	●
30	5	MM AP	2	35	40:1	0,37	R 1/2″	●
30	76	SM AP	4	175	8:1	0,37	R 1/2″	●
30	41	SM AP	4	94	15:1	0,37	R 1/2″	●
30	30	SM AP	4	70	20:1	0,37	R 1/2″	●
30	15	SM AP	4	35	40:1	0,37	R 1/2″	●
20	91	TM AP	6	94	15:1	0,37	R 3/4″	●
20	68	TM AP	6	70	20:1	0,37	R 3/4″	●
20	34	TM AP	6	35	40:1	0,37	R 3/4″	●

PRIUS D 50Hz Series | HIGH PRESSURE

PRIUS D 50Hz AP SINGLE-PHASE

bar	l/h	Pump Head				Motor	AISI 316L	Installation Kit
		model	stroke (mm)	SPM	reduction	kW	hoses connection	
100	4	LM AP	1,5	175	8:1	0,37	R 3/8″	●
100	2	LM AP	1,5	94	15:1	0,37	R 3/8″	●
100	1,5	LM AP	1,5	70	20:1	0,37	R 3/8″	●
50	17	MM AP	2	175	8:1	0,37	R 1/2″	●
50	9	MM AP	2	94	15:1	0,37	R 1/2″	●
50	5	MM AP	2	70	20:1	0,37	R 1/2″	●
50	2,5	MM AP	2	35	40:1	0,37	R 1/2″	●
30	28	MM AP	2	175	8:1	0,37	R 1/2″	●
30	14	MM AP	2	94	15:1	0,37	R 1/2″	●
30	10	MM AP	2	70	20:1	0,37	R 1/2″	●
30	5	MM AP	2	35	40:1	0,37	R 1/2″	●
30	76	SM AP	4	175	8:1	0,37	R 1/2″	●
30	41	SM AP	4	94	15:1	0,37	R 1/2″	●
30	30	SM AP	4	70	20:1	0,37	R 1/2″	●
30	15	SM AP	4	35	40:1	0,37	R 1/2″	●
20	91	TM AP	6	94	15:1	0,55	R 3/4″	●
20	68	TM AP	6	70	20:1	0,37	R 3/4″	●
20	34	TM AP	6	35	40:1	0,37	R 3/4″	●

PRIUS D 50Hz Series | ATEX 2G/2D

PRIUS D 50Hz THREE-PHASE ATEX 2G

bar	l/h	Pump Head				Motor	AISI 316L (II 2G Ex h IIC T3 Gb)	Installation Kit
		model	stroke (mm)	SPM	reduction	kW	hoses connection	
10	6	NM	1,5	35	40:1	0,25	R 1/2"	●
10	60	NM	3	175	8:1	0,25	R 1/2"	●
10	30	NM	3	94	15:1	0,25	R 1/2"	●
10	24	NM	3	70	20:1	0,25	R 1/2"	●
10	12	NM	3	35	40:1	0,25	R 1/2"	●
10	16	NM	4	35	40:1	0,25	R 1/2"	●
10	105	TM	3	175	8:1	0,37	R 3/4"	●
10	56	TM	3	94	15:1	0,37	R 3/4"	●
10	42	TM	3	70	20:1	0,37	R 3/4"	●
10	21	TM	3	35	40:1	0,37	R 3/4"	●
7	160	TM	4	175	8:1	0,37	R 3/4"	●
7	86	TM	4	94	15:1	0,37	R 3/4"	●
7	64	TM	4	70	20:1	0,37	R 3/4"	●
7	32	TM	4	35	40:1	0,37	R 3/4"	●
5	240	TM	6	175	8:1	0,37	R 3/4"	●
5	128	TM	6	94	15:1	0,37	R 3/4"	●
5	96	TM	6	70	20:1	0,37	R 3/4"	●
5	48	TM	6	35	40:1	0,37	R 3/4"	●

PRIUS D 50Hz THREE-PHASE ATEX 2D

bar	l/h	Pump Head				Motor	AISI 316L (II 2D Ex h IIIC T120° Db)	Installation Kit
		model	stroke (mm)	SPM	reduction	kW	hoses connection	
10	6	NM	1,5	35	40:1	0,25	R 1/2"	●
10	60	NM	3	175	8:1	0,25	R 1/2"	●
10	30	NM	3	94	15:1	0,25	R 1/2"	●
10	24	NM	3	70	20:1	0,25	R 1/2"	●
10	12	NM	3	35	40:1	0,25	R 1/2"	●
10	16	NM	4	35	40:1	0,25	R 1/2"	●
10	105	TM	3	175	8:1	0,37	R 3/4"	●
10	56	TM	3	94	15:1	0,37	R 3/4"	●
10	42	TM	3	70	20:1	0,37	R 3/4"	●
10	21	TM	3	35	40:1	0,37	R 3/4"	●
7	160	TM	4	175	8:1	0,37	R 3/4"	●
7	86	TM	4	94	15:1	0,37	R 3/4"	●
7	64	TM	4	70	20:1	0,37	R 3/4"	●
7	32	TM	4	35	40:1	0,37	R 3/4"	●
5	240	TM	6	175	8:1	0,37	R 3/4"	●
5	128	TM	6	94	15:1	0,37	R 3/4"	●
5	96	TM	6	70	20:1	0,37	R 3/4"	●
5	48	TM	6	35	40:1	0,37	R 3/4"	●

PRIUS D 50Hz Series | HIGH PRESSURE ATEX 2G/2D

PRIUS D 50Hz AP THREE-PHASE ATEX 2G

bar	l/h	Pump Head				Motor	AISI 316L (II 2G Ex h IIC T3 Gb)	Installation Kit
		model	stroke (mm)	SPM	reduction	kW	hoses connection	
100	4	LM AP	1,5	175	8:1	0,37	R 3/8″	●
100	2	LM AP	1,5	94	15:1	0,37	R 3/8″	●
100	1,5	LM AP	1,5	70	20:1	0,37	R 3/8″	●
50	17	MM AP	2	175	8:1	0,37	R 1/2″	●
50	9	MM AP	2	94	15:1	0,37	R 1/2″	●
50	5	MM AP	2	70	20:1	0,37	R 1/2″	●
50	2,5	MM AP	2	35	40:1	0,37	R 1/2″	●
30	28	NM AP	2	175	8:1	0,37	R 1/2″	●
30	15	NM AP	2	94	15:1	0,37	R 1/2″	●
30	10	NM AP	2	70	20:1	0,37	R 1/2″	●
30	5	NM AP	2	35	40:1	0,37	R 1/2″	●
30	76	SM AP	4	175	8:1	0,37	R 1/2″	●
30	41	SM AP	4	94	15:1	0,37	R 1/2″	●
30	30	SM AP	4	70	20:1	0,37	R 1/2″	●
30	14	SM AP	4	35	40:1	0,37	R 1/2″	●
20	91	TM AP	4	94	15:1	0,37	R 3/4″	●
20	68	TM AP	4	70	20:1	0,37	R 3/4″	●
20	34	TM AP	4	35	40:1	0,37	R 3/4″	●

PRIUS D 50Hz AP THREE-PHASE ATEX 2D

bar	l/h	Pump Head				Motor	AISI 316L (II 2D Ex h IIIC T120° Db)	Installation Kit
		model	stroke (mm)	SPM	reduction	kW	hoses connection	
100	4	LM AP	1,5	175	8:1	0,37	R 3/8″	●
100	2	LM AP	1,5	94	15:1	0,37	R 3/8″	●
100	1,5	LM AP	1,5	70	20:1	0,37	R 3/8″	●
50	17	MM AP	2	175	8:1	0,37	R 1/2″	●
50	9	MM AP	2	94	15:1	0,37	R 1/2″	●
50	5	MM AP	2	70	20:1	0,37	R 1/2″	●
50	2,5	MM AP	2	35	40:1	0,37	R 1/2″	●
30	28	NM AP	2	175	8:1	0,37	R 1/2″	●
30	15	NM AP	2	94	15:1	0,37	R 1/2″	●
30	10	NM AP	2	70	20:1	0,37	R 1/2″	●
30	5	NM AP	2	35	40:1	0,37	R 1/2″	●
30	76	SM AP	4	175	8:1	0,37	R 1/2″	●
30	41	SM AP	4	94	15:1	0,37	R 1/2″	●
30	30	SM AP	4	70	20:1	0,37	R 1/2″	●
30	14	SM AP	4	35	40:1	0,37	R 1/2″	●
20	91	TM AP	4	94	15:1	0,37	R 3/4″	●
20	68	TM AP	4	70	20:1	0,37	R 3/4″	●
20	34	TM AP	4	35	40:1	0,37	R 3/4″	●

PRIUS D 50Hz Series | ATEX 3G/3D

PRIUS D 50Hz THREE-PHASE ATEX 3G

bar	l/h	Pump Head				Motor	PVDF (II 3G Ex h IIC T3 Gc)	Installation Kit
		model	stroke (mm)	SPM	reduction	kW	hoses connection	
10	60	NM	3	175	8:1	0,18	/	A
10	30	NM	3	94	15:1	0,18	/	A
10	24	NM	3	70	20:1	0,18	/	A
10	12	NM	3	35	40:1	0,18	/	A
10	16	NM	4	35	40:1	0,18	/	A
10	105	TM	3	175	8:1	0,37	/	A
10	56	TM	3	94	15:1	0,37	/	A
10	42	TM	3	70	20:1	0,37	/	A
10	21	NM	3	35	40:1	0,37	/	A
7	160	TM	4	175	8:1	0,37	/	A
7	86	TM	4	94	15:1	0,37	/	A
7	64	TM	4	70	20:1	0,37	/	A
7	32	TM	4	35	40:1	0,37	/	A
5	240	TM	6	175	8:1	0,37	/	B
5	128	TM	6	94	15:1	0,37	/	B
5	96	TM	6	70	20:1	0,37	/	B
5	48	TM	6	35	40:1	0,37	/	B
5	1000	UMS	10	175	8:1	0,55	/	C
2	1000	UMS	10	175	8:1	0,37	/	C
5	520	UMS	10	94	15:1	0,37	/	C
4	520	UMS	10	94	15:1	0,37	/	C
5	390	UMS	10	70	20:1	0,37	/	C
5	180	UMS	10	35	40:1	0,37	/	C
5	350	UMS	4	175	8:1	0,37	/	C
5	188	UMS	4	94	15:1	0,37	/	C
5	140	UMS	4	70	20:1	0,37	/	C
5	70	UMS	4	35	40:1	0,37	/	C
5	440	UMS	5	175	8:1	0,37	/	C
5	236	UMS	5	94	15:1	0,37	/	C
5	176	UMS	5	70	20:1	0,37	/	C
5	88	UMS	5	35	40:1	0,37	/	C
5	530	UMS	6	175	8:1	0,37	/	C
5	284	UMS	6	94	15:1	0,37	/	C
5	212	UMS	6	70	20:1	0,37	/	C
5	106	UMS	6	35	40:1	0,37	/	C
5	750	UMS	8	175	8:1	0,55	/	C
3	750	UMS	8	175	8:1	0,37	/	C
5	380	UMS	8	94	15:1	0,37	/	C
5	290	UMS	8	70	20:1	0,37	/	C
5	141	UMS	8	35	40:1	0,37	/	C

PRIUS D 50Hz Series | ATEX 3G/3D

PRIUS D 50Hz THREE-PHASE ATEX 3G

bar	l/h	Pump Head				Motor	AISI 316L (II 3G Ex h IIC T3 Gc)	Installation Kit
		model	stroke (mm)	SPM	reduction	kW	hoses connection	
5	1000	UMS	10	175	8:1	0,55	/	C
2	1000	UMS	10	175	8:1	0,37	/	C
5	520	UMS	10	94	15:1	0,37	/	C
4	520	UMS	10	94	15:1	0,37	/	C
5	390	UMS	10	70	20:1	0,37	/	C
5	180	UMS	10	35	40:1	0,37	/	C
5	350	UMS	4	175	8:1	0,37	/	C
5	188	UMS	4	94	15:1	0,37	/	C
5	140	UMS	4	70	20:1	0,37	/	C
5	70	UMS	4	35	40:1	0,37	/	C
5	440	UMS	5	175	8:1	0,37	/	C
5	236	UMS	5	94	15:1	0,37	/	C
5	176	UMS	5	70	20:1	0,37	/	C
5	88	UMS	5	35	40:1	0,37	/	C
5	530	UMS	6	175	8:1	0,37	/	C
5	284	UMS	6	94	15:1	0,37	/	C
5	212	UMS	6	70	20:1	0,37	/	C
5	106	UMS	6	35	40:1	0,37	/	C
5	750	UMS	8	175	8:1	0,55	/	C
3	750	UMS	8	175	8:1	0,37	/	C
5	380	UMS	8	94	15:1	0,37	/	C
5	290	UMS	8	70	20:1	0,37	/	C
5	141	UMS	8	35	40:1	0,37	/	C

PRIUS D 50Hz Series | ATEX 3G/3D

PRIUS D 50Hz THREE-PHASE ATEX 3G

bar	l/h	Pump Head				Motor	PP (II 3G Ex h IIC T3 Gc)	Installation Kit
		model	stroke (mm)	SPM	reduction	kW	hoses connection	
10	60	NM	3	175	8:1	0,18	/	A
10	30	NM	3	94	15:1	0,18	/	A
10	24	NM	3	70	20:1	0,18	/	A
10	12	NM	3	35	40:1	0,18	/	A
10	16	NM	4	35	40:1	0,18	/	A
10	105	TM	3	175	8:1	0,37	/	A
10	56	TM	3	94	15:1	0,37	/	A
10	42	TM	3	70	20:1	0,37	/	A
10	21	NM	3	35	40:1	0,37	/	A
7	160	TM	4	175	8:1	0,37	/	A
7	86	TM	4	94	15:1	0,37	/	A
7	64	TM	4	70	20:1	0,37	/	A
7	32	TM	4	35	40:1	0,37	/	A
5	240	TM	6	175	8:1	0,37	/	B
5	128	TM	6	94	15:1	0,37	/	B
5	96	TM	6	70	20:1	0,37	/	B
5	48	TM	6	35	40:1	0,37	/	B
5	1000	UMS	10	175	8:1	0,55	/	C
2	1000	UMS	10	175	8:1	0,37	/	C
5	520	UMS	10	94	15:1	0,37	/	C
4	520	UMS	10	94	15:1	0,37	/	C
5	390	UMS	10	70	20:1	0,37	/	C
5	180	UMS	10	35	40:1	0,37	/	C
5	350	UMS	4	175	8:1	0,37	/	C
5	188	UMS	4	94	15:1	0,37	/	C
5	140	UMS	4	70	20:1	0,37	/	C
5	70	UMS	4	35	40:1	0,37	/	C
5	440	UMS	5	175	8:1	0,37	/	C
5	236	UMS	5	94	15:1	0,37	/	C
5	176	UMS	5	70	20:1	0,37	/	C
5	88	UMS	5	35	40:1	0,37	/	C
5	530	UMS	6	175	8:1	0,37	/	C
5	284	UMS	6	94	15:1	0,37	/	C
5	212	UMS	6	70	20:1	0,37	/	C
5	106	UMS	6	35	40:1	0,37	/	C
5	750	UMS	8	175	8:1	0,55	/	C
3	750	UMS	8	175	8:1	0,37	/	C
5	380	UMS	8	94	15:1	0,37	/	C
5	290	UMS	8	70	20:1	0,37	/	C
5	141	UMS	8	35	40:1	0,37	/	C

PRIUS D 50Hz Series | ATEX 3G/3D

PRIUS D 50Hz THREE-PHASE ATEX 3D

bar	l/h	Pump Head				Motor	PVDF (II 3D Ex h IIIC T120° Dc)	Installation Kit
		model	stroke (mm)	SPM	reduction	kW	hoses connection	
10	60	NM	3	175	8:1	0,25	/	A
10	30	NM	3	94	15:1	0,25	/	A
10	24	NM	3	70	20:1	0,25	/	A
10	12	NM	3	35	40:1	0,25	/	A
10	16	NM	4	35	40:1	0,25	/	A
10	105	TM	3	175	8:1	0,37	/	A
10	56	TM	3	94	15:1	0,37	/	A
10	42	TM	3	70	20:1	0,37	/	A
10	21	NM	3	35	40:1	0,37	/	A
7	160	TM	4	175	8:1	0,37	/	A
7	86	TM	4	94	15:1	0,37	/	A
7	64	TM	4	70	20:1	0,37	/	A
7	32	TM	4	35	40:1	0,37	/	A
5	240	TM	6	175	8:1	0,37	/	B
5	128	TM	6	94	15:1	0,37	/	B
5	96	TM	6	70	20:1	0,37	/	B
5	48	TM	6	35	40:1	0,37	/	B
5	1000	UMS	10	175	8:1	0,25	/	C
2	1000	UMS	10	175	8:1	0,37	/	C
5	520	UMS	10	94	15:1	0,37	/	C
4	520	UMS	10	94	15:1	0,37	/	C
5	390	UMS	10	70	20:1	0,37	/	C
5	180	UMS	10	35	40:1	0,37	/	C
5	350	UMS	4	175	8:1	0,37	/	C
5	188	UMS	4	94	15:1	0,37	/	C
5	140	UMS	4	70	20:1	0,37	/	C
5	70	UMS	4	35	40:1	0,37	/	C
5	440	UMS	5	175	8:1	0,37	/	C
5	236	UMS	5	94	15:1	0,37	/	C
5	176	UMS	5	70	20:1	0,37	/	C
5	88	UMS	5	35	40:1	0,37	/	C
5	530	UMS	6	175	8:1	0,37	/	C
5	284	UMS	6	94	15:1	0,37	/	C
5	212	UMS	6	70	20:1	0,37	/	C
5	106	UMS	6	35	40:1	0,37	/	C
5	750	UMS	8	175	8:1	0,25	/	C
3	750	UMS	8	175	8:1	0,37	/	C
5	380	UMS	8	94	15:1	0,37	/	C
5	290	UMS	8	70	20:1	0,37	/	C
5	141	UMS	8	35	40:1	0,37	/	C

PRIUS D 50Hz Series | ATEX 3G/3D

PRIUS D 50Hz THREE-PHASE ATEX 3D

bar	l/h	Pump Head				Motor	AISI 316L (II 3D Ex h IIIC T120° Dc)	Installation Kit
		model	stroke (mm)	SPM	reduction	kW	hoses connection	
5	1000	UMS	10	175	8:1	0,55	/	C
2	1000	UMS	10	175	8:1	0,37	/	C
5	520	UMS	10	94	15:1	0,37	/	C
4	520	UMS	10	94	15:1	0,37	/	C
5	390	UMS	10	70	20:1	0,37	/	C
5	180	UMS	10	35	40:1	0,37	/	C
5	350	UMS	4	175	8:1	0,37	/	C
5	188	UMS	4	94	15:1	0,37	/	C
5	140	UMS	4	70	20:1	0,37	/	C
5	70	UMS	4	35	40:1	0,37	/	C
5	440	UMS	5	175	8:1	0,37	/	C
5	236	UMS	5	94	15:1	0,37	/	C
5	176	UMS	5	70	20:1	0,37	/	C
5	88	UMS	5	35	40:1	0,37	/	C
5	530	UMS	6	175	8:1	0,37	/	C
5	284	UMS	6	94	15:1	0,37	/	C
5	212	UMS	6	70	20:1	0,37	/	C
5	106	UMS	6	35	40:1	0,37	/	C
5	750	UMS	8	175	8:1	0,55	/	C
3	750	UMS	8	175	8:1	0,37	/	C
5	380	UMS	8	94	15:1	0,37	/	C
5	290	UMS	8	70	20:1	0,37	/	C
5	141	UMS	8	35	40:1	0,37	/	C

PRIUS D 50Hz Series | ATEX 3G/3D

PRIUS D 50Hz THREE-PHASE ATEX 3D

bar	l/h	Pump Head				Motor	PP (II 3D Ex h IIIC T120° Dc)	Installation Kit
		model	stroke (mm)	SPM	reduction	kW	hoses connection	
10	60	NM	3	175	8:1	0,18	/	A
10	30	NM	3	94	15:1	0,18	/	A
10	24	NM	3	70	20:1	0,18	/	A
10	12	NM	3	35	40:1	0,18	/	A
10	16	NM	4	35	40:1	0,18	/	A
10	105	TM	3	175	8:1	0,37	/	A
10	56	TM	3	94	15:1	0,37	/	A
10	42	TM	3	70	20:1	0,37	/	A
10	21	NM	3	35	40:1	0,37	/	A
7	160	TM	4	175	8:1	0,37	/	A
7	86	TM	4	94	15:1	0,37	/	A
7	64	TM	4	70	20:1	0,37	/	A
7	32	TM	4	35	40:1	0,37	/	A
5	240	TM	6	175	8:1	0,37	/	B
5	128	TM	6	94	15:1	0,37	/	B
5	96	TM	6	70	20:1	0,37	/	B
5	48	TM	6	35	40:1	0,37	/	B
5	1000	UMS	10	175	8:1	0,55	/	C
2	1000	UMS	10	175	8:1	0,37	/	C
5	520	UMS	10	94	15:1	0,37	/	C
4	520	UMS	10	94	15:1	0,37	/	C
5	390	UMS	10	70	20:1	0,37	/	C
5	180	UMS	10	35	40:1	0,37	/	C
5	350	UMS	4	175	8:1	0,37	/	C
5	188	UMS	4	94	15:1	0,37	/	C
5	140	UMS	4	70	20:1	0,37	/	C
5	70	UMS	4	35	40:1	0,37	/	C
5	440	UMS	5	175	8:1	0,37	/	C
5	236	UMS	5	94	15:1	0,37	/	C
5	176	UMS	5	70	20:1	0,37	/	C
5	88	UMS	5	35	40:1	0,37	/	C
5	530	UMS	6	175	8:1	0,37	/	C
5	284	UMS	6	94	15:1	0,37	/	C
5	212	UMS	6	70	20:1	0,37	/	C
5	106	UMS	6	35	40:1	0,37	/	C
5	750	UMS	8	175	8:1	0,55	/	C
3	750	UMS	8	175	8:1	0,37	/	C
5	380	UMS	8	94	15:1	0,37	/	C
5	290	UMS	8	70	20:1	0,37	/	C
5	141	UMS	8	35	40:1	0,37	/	C

Series\PRIUS D 60 Hz

Diaphragm motor-driven dosing pumps

PRIUS series of motor-driven dosing pumps have been entirely designed and manufactured by EMEC to meet higher level requirements. PRIUS D 60 Hz pumps with constant dosing are equipped with PTFE diaphragm and are also available in the AP version for high pressures and with three-phase or single-phase (Mono) motor.
ATEX certified models are allowed to be used in potentially explosive atmospheres.

PERFORMANCE

950 l/h

100 bar

POWER SUPPLY

380 VAC

220 VAC

115 VAC

VENTING

MANUAL

SELF

Via Donatori di Sangue, 1 - 02100 Rieti (Italy)
+39 074622841 | emecpumps.com

Specifications subject to change without notice | R2025

emec
SIMPLE AS WATER

IQNET CERTIFIED MANAGEMENT SYSTEM
qualityaustria
SYSTEM CERTIFIED
ISO 9001:2015 No.07728/0
ISO 14001:2015 No.00997/0
ISO 45001:2018 No.01121/0

PRIUS D 60Hz Series | STANDARD

PRIUS D 60Hz THREE-PHASE

bar	l/h	Pump Head				Motor	PVDF	Installation Kit
		model	stroke (mm)	SPM	reduction	kW	hoses connection	
10	55	NM	3	175	10:1	0,18	G 1/2" 13 mm (i.d.)	A
10	27	NM	3	87	20:1	0,18	G 1/2" 13 mm (i.d.)	A
10	14	NM	3	44	40:1	0,18	G 1/2" 13 mm (i.d.)	A
10	100	TM	3	175	10:1	0,37	G 3/4" 13 mm (i.d.)	A
10	50	TM	3	87	20:1	0,37	G 3/4" 13 mm (i.d.)	A
10	25	TM	3	44	40:1	0,37	G 3/4" 13 mm (i.d.)	A
7	150	TM	4	175	10:1	0,37	G 3/4" 13 mm (i.d.)	A
7	75	TM	4	87	20:1	0,37	G 3/4" 13 mm (i.d.)	A
7	37	TM	4	44	40:1	0,37	G 3/4" 13 mm (i.d.)	A
5	230	TM	6	175	10:1	0,37	G 3/4" 18 mm (i.d.)	B
5	115	TM	6	87	20:1	0,37	G 3/4" 18 mm (i.d.)	B
5	57	TM	6	44	40:1	0,37	G 3/4" 18 mm (i.d.)	B
2	950	UMS	10	175	10:1	0,37	G 1 1/2" 30 mm (i.d.)	C
5	950	UMS	10	175	10:1	0,55	G 1 1/2" 30 mm (i.d.)	C
2	472	UMS	10	87	20:1	0,37	G 1 1/2" 30 mm (i.d.)	C
2	238	UMS	10	44	40:1	0,37	G 1 1/2" 30 mm (i.d.)	C
5	335	UMS	4	175	10:1	0,37	G 1 1/2" 30 mm (i.d.)	C
5	165	UMS	4	87	20:1	0,37	G 1 1/2" 30 mm (i.d.)	C
5	84	UMS	4	44	40:1	0,37	G 1 1/2" 30 mm (i.d.)	C
5	420	UMS	5	175	10:1	0,37	G 1 1/2" 30 mm (i.d.)	C
5	210	UMS	5	87	20:1	0,37	G 1 1/2" 30 mm (i.d.)	C
5	105	UMS	5	44	40:1	0,37	G 1 1/2" 30 mm (i.d.)	C
5	505	UMS	6	175	10:1	0,37	G 1 1/2" 30 mm (i.d.)	C
5	250	UMS	6	87	20:1	0,37	G 1 1/2" 30 mm (i.d.)	C
5	126	UMS	6	44	40:1	0,37	G 1 1/2" 30 mm (i.d.)	C
3	720	UMS	8	175	10:1	0,37	G 1 1/2" 30 mm (i.d.)	C
3	357	UMS	8	87	20:1	0,37	G 1 1/2" 30 mm (i.d.)	C
3	181	UMS	8	44	40:1	0,37	G 1 1/2" 30 mm (i.d.)	C
5	720	UMS	8	175	10:1	0,55	G 1 1/2" 30 mm (i.d.)	C

PRIUS D 60Hz Series | STANDARD

PRIUS D 60Hz THREE-PHASE

bar	l/h	Pump Head				Motor	AISI 316L	Installation Kit
		model	stroke (mm)	SPM	reduction	kW	hoses connection	
10	55	NM	3	175	10:1	0,18	R 1/2″	A
10	27	NM	3	87	20:1	0,18	R 1/2″	A
10	14	NM	3	44	40:1	0,18	R 1/2″	A
10	100	TM	3	175	10:1	0,37	R 3/4″	A
10	50	TM	3	87	20:1	0,37	R 3/4″	A
10	25	TM	3	44	40:1	0,37	R 3/4″	A
7	150	TM	4	175	10:1	0,37	R 3/4″	A
7	75	TM	4	87	20:1	0,37	R 3/4″	A
7	37	TM	4	44	40:1	0,37	R 3/4″	A
5	230	TM	6	175	10:1	0,37	R 3/4″	B
5	115	TM	6	87	20:1	0,37	R 3/4″	B
5	57	TM	6	44	40:1	0,37	R 3/4″	B
2	950	UMS	10	175	10:1	0,37	R 1″	C
5	950	UMS	10	175	10:1	0,55	R 1″	C
2	472	UMS	10	87	20:1	0,37	R 1″	C
2	238	UMS	10	44	40:1	0,37	R 1″	C
5	335	UMS	4	175	10:1	0,37	R 1″	C
5	165	UMS	4	87	20:1	0,37	R 1″	C
5	84	UMS	4	44	40:1	0,37	R 1″	C
5	420	UMS	5	175	10:1	0,37	R 1″	C
5	210	UMS	5	87	20:1	0,37	R 1″	C
5	105	UMS	5	44	40:1	0,37	R 1″	C
5	505	UMS	6	175	10:1	0,37	R 1″	C
5	250	UMS	6	87	20:1	0,37	R 1″	C
5	126	UMS	6	44	40:1	0,37	R 1″	C
3	720	UMS	8	175	10:1	0,37	R 1″	C
3	357	UMS	8	87	20:1	0,37	R 1″	C
3	181	UMS	8	44	40:1	0,37	R 1″	C
5	720	UMS	8	175	10:1	0,55	R 1″	C

PRIUS D 60Hz Series | STANDARD

PRIUS D 60Hz THREE-PHASE

bar	l/h	Pump Head				Motor	PP	Installation Kit
		model	stroke (mm)	SPM	reduction	kW	hoses connection	
10	55	NM	3	175	10:1	0,18	G 1/2" 13 mm (i.d.)	A
10	27	NM	3	87	20:1	0,18	G 1/2" 13 mm (i.d.)	A
10	14	NM	3	44	40:1	0,18	G 1/2" 13 mm (i.d.)	A
10	100	TM	3	175	10:1	0,37	G 3/4" 13 mm (i.d.)	A
10	50	TM	3	87	20:1	0,37	G 3/4" 13 mm (i.d.)	A
10	25	TM	3	44	40:1	0,37	G 3/4" 13 mm (i.d.)	A
7	150	TM	4	175	10:1	0,37	G 3/4" 13 mm (i.d.)	A
7	75	TM	4	87	20:1	0,37	G 3/4" 13 mm (i.d.)	A
7	37	TM	4	44	40:1	0,37	G 3/4" 13 mm (i.d.)	A
5	230	TM	6	175	10:1	0,37	G 3/4" 18 mm (i.d.)	B
5	115	TM	6	87	20:1	0,37	G 3/4" 18 mm (i.d.)	B
5	57	TM	6	44	40:1	0,37	G 3/4" 18 mm (i.d.)	B
2	950	UMS	10	175	10:1	0,37	G 1 1/2" 30 mm (i.d.)	C
5	950	UMS	10	175	10:1	0,55	G 1 1/2" 30 mm (i.d.)	C
2	472	UMS	10	87	20:1	0,37	G 1 1/2" 30 mm (i.d.)	C
2	238	UMS	10	44	40:1	0,37	G 1 1/2" 30 mm (i.d.)	C
5	335	UMS	4	175	10:1	0,37	G 1 1/2" 30 mm (i.d.)	C
5	165	UMS	4	87	20:1	0,37	G 1 1/2" 30 mm (i.d.)	C
5	84	UMS	4	44	40:1	0,37	G 1 1/2" 30 mm (i.d.)	C
5	420	UMS	5	175	10:1	0,37	G 1 1/2" 30 mm (i.d.)	C
5	210	UMS	5	87	20:1	0,37	G 1 1/2" 30 mm (i.d.)	C
5	105	UMS	5	44	40:1	0,37	G 1 1/2" 30 mm (i.d.)	C
5	505	UMS	6	175	10:1	0,37	G 1 1/2" 30 mm (i.d.)	C
5	250	UMS	6	87	20:1	0,37	G 1 1/2" 30 mm (i.d.)	C
5	126	UMS	6	44	40:1	0,37	G 1 1/2" 30 mm (i.d.)	C
3	720	UMS	8	175	10:1	0,37	G 1 1/2" 30 mm (i.d.)	C
3	357	UMS	8	87	20:1	0,37	G 1 1/2" 30 mm (i.d.)	C
3	181	UMS	8	44	40:1	0,37	G 1 1/2" 30 mm (i.d.)	C
5	720	UMS	8	175	10:1	0,55	G 1 1/2" 30 mm (i.d.)	C

PRIUS D 60Hz Series | STANDARD

PRIUS D 60Hz SINGLE-PHASE

bar	l/h	Pump Head				Motor	PVDF	Installation Kit
		model	stroke (mm)	SPM	reduction	kW	hoses connection	
10	55	NM	3	175	10:1	0,37	G 1/2" 13 mm (i.d.)	A
10	27	NM	3	87	20:1	0,37	G 1/2" 13 mm (i.d.)	A
10	14	NM	3	44	40:1	0,37	G 1/2" 13 mm (i.d.)	A
10	100	TM	3	175	10:1	0,37	G 3/4" 13 mm (i.d.)	A
10	50	TM	3	87	20:1	0,37	G 3/4" 13 mm (i.d.)	A
10	25	TM	3	44	40:1	0,37	G 3/4" 13 mm (i.d.)	A
7	150	TM	4	175	10:1	0,37	G 3/4" 13 mm (i.d.)	A
7	75	TM	4	87	20:1	0,37	G 3/4" 13 mm (i.d.)	A
7	37	TM	4	44	40:1	0,37	G 3/4" 13 mm (i.d.)	A
5	230	TM	6	175	10:1	0,37	G 3/4" 18 mm (i.d.)	B
5	115	TM	6	87	20:1	0,37	G 3/4" 18 mm (i.d.)	B
5	57	TM	6	44	40:1	0,37	G 3/4" 18 mm (i.d.)	B
5	335	UMS	4	175	10:1	0,55	G 1 1/2" 30 mm (i.d.)	C
5	165	UMS	4	87	20:1	0,37	G 1 1/2" 30 mm (i.d.)	C
5	84	UMS	4	44	40:1	0,37	G 1 1/2" 30 mm (i.d.)	C
5	420	UMS	5	175	10:1	0,55	G 1 1/2" 30 mm (i.d.)	C
5	210	UMS	5	87	20:1	0,37	G 1 1/2" 30 mm (i.d.)	C
5	105	UMS	5	44	40:1	0,37	G 1 1/2" 30 mm (i.d.)	C
5	505	UMS	6	175	10:1	0,55	G 1 1/2" 30 mm (i.d.)	C
5	250	UMS	6	87	20:1	0,37	G 1 1/2" 30 mm (i.d.)	C
5	126	UMS	6	44	40:1	0,37	G 1 1/2" 30 mm (i.d.)	C

PRIUS D 60Hz SINGLE-PHASE

bar	l/h	Pump Head				Motor	AISI 316L	Installation Kit
		model	stroke (mm)	SPM	reduction	kW	hoses connection	
10	55	NM	3	175	10:1	0,37	R 1/2"	A
10	27	NM	3	87	20:1	0,37	R 1/2"	A
10	14	NM	3	44	40:1	0,37	R 1/2"	A
10	100	TM	3	175	10:1	0,37	R 3/4"	A
10	50	TM	3	87	20:1	0,37	R 3/4"	A
10	25	TM	3	44	40:1	0,37	R 3/4"	A
7	150	TM	4	175	10:1	0,37	R 3/4"	A
7	75	TM	4	87	20:1	0,37	R 3/4"	A
7	37	TM	4	44	40:1	0,37	R 3/4"	A
5	230	TM	6	175	10:1	0,37	R 3/4"	B
5	115	TM	6	87	20:1	0,37	R 3/4"	B
5	57	TM	6	44	40:1	0,37	R 3/4"	B
5	335	UMS	4	175	10:1	0,55	R 1"	C
5	165	UMS	4	87	20:1	0,37	R 1"	C
5	84	UMS	4	44	40:1	0,37	R 1"	C
5	420	UMS	5	175	10:1	0,55	R 1"	C
5	210	UMS	5	87	20:1	0,37	R 1"	C
5	105	UMS	5	44	40:1	0,37	R 1"	C
5	505	UMS	6	175	10:1	0,55	R 1"	C
5	250	UMS	6	87	20:1	0,37	R 1"	C
5	126	UMS	6	44	40:1	0,37	R 1"	C

PRIUS D 60Hz Series | STANDARD

PRIUS D 60Hz SINGLE-PHASE

bar	l/h	Pump Head				Motor	PP	Installation Kit
		model	stroke (mm)	SPM	reduction	kW	hoses connection	
10	55	NM	3	175	10:1	0,37	G 1/2" 13 mm (i.d.)	A
10	27	NM	3	87	20:1	0,37	G 1/2" 13 mm (i.d.)	A
10	14	NM	3	44	40:1	0,37	G 1/2" 13 mm (i.d.)	A
10	100	TM	3	175	10:1	0,37	G 3/4" 13 mm (i.d.)	A
10	50	TM	3	87	20:1	0,37	G 3/4" 13 mm (i.d.)	A
10	25	TM	3	44	40:1	0,37	G 3/4" 13 mm (i.d.)	A
7	150	TM	4	175	10:1	0,37	G 3/4" 13 mm (i.d.)	A
7	75	TM	4	87	20:1	0,37	G 3/4" 13 mm (i.d.)	A
7	37	TM	4	44	40:1	0,37	G 3/4" 13 mm (i.d.)	A
5	230	TM	6	175	10:1	0,37	G 3/4" 18 mm (i.d.)	B
5	115	TM	6	87	20:1	0,37	G 3/4" 18 mm (i.d.)	B
5	57	TM	6	44	40:1	0,37	G 3/4" 18 mm (i.d.)	B
5	335	UMS	4	175	10:1	0,55	G 1 1/2" 30 mm (i.d.)	C
5	165	UMS	4	87	20:1	0,37	G 1 1/2" 30 mm (i.d.)	C
5	84	UMS	4	44	40:1	0,37	G 1 1/2" 30 mm (i.d.)	C
5	420	UMS	5	175	10:1	0,55	G 1 1/2" 30 mm (i.d.)	C
5	210	UMS	5	87	20:1	0,37	G 1 1/2" 30 mm (i.d.)	C
5	105	UMS	5	44	40:1	0,37	G 1 1/2" 30 mm (i.d.)	C
5	505	UMS	6	175	10:1	0,55	G 1 1/2" 30 mm (i.d.)	C
5	250	UMS	6	87	20:1	0,37	G 1 1/2" 30 mm (i.d.)	C
5	126	UMS	6	44	40:1	0,37	G 1 1/2" 30 mm (i.d.)	C

PRIUS D 60Hz Series | HIGH PRESSURE

PRIUS D 60Hz AP THREE-PHASE

bar	l/h	Pump Head				Motor	PVDF	Installation Kit
		model	stroke (mm)	SPM	reduction	kW	hoses connection	
20	27	NM AP	2	175	10:1	0,37	8x10 (PVDF) / 8x12 (PVC)	●
20	13	NM AP	2	87	20:1	0,37	8x10 (PVDF) / 8x12 (PVC)	●
20	7	NM AP	2	44	40:1	0,37	8x10 (PVDF) / 8x12 (PVC)	●

PRIUS D 60Hz AP THREE-PHASE

bar	l/h	Pump Head				Motor	AISI 316L	Installation Kit
		model	stroke (mm)	SPM	reduction	kW	hoses connection	
100	3	LM AP	1,5	175	10:1	0,37	R 3/8″	●
100	1,5	LM AP	1,5	87	20:1	0,37	R 3/8″	●
50	14	MM AP	2	175	10:1	0,37	R 1/2″	●
50	7	MM AP	2	87	20:1	0,37	R 1/2″	●
50	3,5	MM AP	2	44	40:1	0,37	R 1/2″	●
30	26	NM AP	2	175	10:1	0,37	R 1/2″	●
30	13	NM AP	2	87	20:1	0,37	R 1/2″	●
30	6	NM AP	2	44	40:1	0,37	R 1/2″	●
30	72	SM AP	4	175	10:1	0,37	R 1/2″	●
30	36	SM AP	4	87	20:1	0,37	R 1/2″	●
30	18	SM AP	4	44	40:1	0,37	R 1/2″	●
20	153	TM AP	6	175	10:1	0,37	R 3/4″	●
20	76	TM AP	6	87	20:1	0,37	R 3/4″	●
20	38	TM AP	6	44	40:1	0,37	R 3/4″	●

PRIUS D 60Hz Series | HIGH PRESSURE

PRIUS D 60Hz AP SINGLE-PHASE

bar	l/h	Pump Head				Motor	AISI 316L	Installation Kit
		model	stroke (mm)	SPM	reduction	kW	hoses connection	
100	3	LM AP	1,5	175	10:1	0,37	R 3/8″	●
100	1,5	LM AP	1,5	87	20:1	0,37	R 3/8″	●
50	14	MM AP	2	175	10:1	0,37	R 1/2″	●
50	7	MM AP	2	87	20:1	0,37	R 1/2″	●
50	3,5	MM AP	2	44	40:1	0,37	R 1/2″	●
30	26	NM AP	2	175	10:1	0,37	R 1/2″	●
30	13	NM AP	2	87	20:1	0,37	R 1/2″	●
30	6	NM AP	2	44	40:1	0,37	R 1/2″	●
30	72	SM AP	4	175	10:1	0,37	R 1/2″	●
30	36	SM AP	4	87	20:1	0,37	R 1/2″	●
30	18	SM AP	4	44	40:1	0,37	R 1/2″	●
20	153	TM AP	6	175	10:1	0,55	R 3/4″	●
20	76	TM AP	6	87	20:1	0,37	R 3/4″	●
20	38	TM AP	6	44	40:1	0,37	R 3/4″	●

PRIUS D 60Hz Series | ATEX 2G/2D

PRIUS D 60Hz THREE-PHASE ATEX 2G

bar	l/h	Pump Head				Motor	AISI 316L (II 2G Ex h IIC T3 Gb)	Installation Kit
		model	stroke (mm)	SPM	reduction	kW	hoses connection	
10	7	NM	1,5	35	40:1	0,37	R 1/2"	●
10	55	NM	3	175	10:1	0,37	R 1/2"	●
10	27	NM	3	70	20:1	0,37	R 1/2"	●
10	14	NM	3	35	40:1	0,37	R 1/2"	●
10	100	TM	3	175	10:1	0,37	R 1/2"	●
10	50	TM	3	87	20:1	0,37	R 3/4"	●
10	25	TM	3	44	40:1	0,37	R 3/4"	●
7	150	TM	4	175	10:1	0,37	R 3/4"	●
7	75	TM	4	87	20:1	0,37	R 3/4"	●
7	37	TM	4	44	40:1	0,37	R 3/4"	●
5	230	TM	6	175	10:1	0,37	R 3/4"	●
5	115	TM	6	87	20:1	0,37	R 3/4"	●
5	57	TM	6	44	40:1	0,37	R 3/4"	●

PRIUS D 60Hz THREE-PHASE ATEX 2D

bar	l/h	Pump Head				Motor	AISI 316L (II 2D Ex h IIIC T120° Db)	Installation Kit
		model	stroke (mm)	SPM	reduction	kW	hoses connection	
10	7	NM	1,5	35	40:1	0,43	R 1/2"	●
10	55	NM	3	175	10:1	0,43	R 1/2"	●
10	27	NM	3	70	20:1	0,43	R 1/2"	●
10	14	NM	3	35	40:1	0,43	R 1/2"	●
10	100	TM	3	175	10:1	0,43	R 1/2"	●
10	50	TM	3	87	20:1	0,43	R 3/4"	●
10	25	TM	3	44	40:1	0,43	R 3/4"	●
7	150	TM	4	175	10:1	0,43	R 3/4"	●
7	75	TM	4	87	20:1	0,43	R 3/4"	●
7	37	TM	4	44	40:1	0,43	R 3/4"	●
5	230	TM	6	175	10:1	0,43	R 3/4"	●
5	115	TM	6	87	20:1	0,43	R 3/4"	●
5	57	TM	6	44	40:1	0,43	R 3/4"	●

PRIUS D 60Hz Series | HIGH PRESSURE ATEX 2G/2D

PRIUS D 60Hz AP THREE-PHASE ATEX 2G

bar	l/h	Pump Head				Motor	AISI 316L (II 2G Ex h IIC T3 Gb)	Installation Kit
		model	stroke (mm)	SPM	reduction	kW	hoses connection	
100	3	LM AP	1,5	175	10:1	0,43	R 3/8″	●
100	1,5	LM AP	1,5	70	20:1	0,43	R 3/8″	●
50	14	MM AP	2	175	10:1	0,43	R 1/2″	●
50	7	MM AP	2	87	20:1	0,43	R 1/2″	●
50	3,5	MM AP	2	44	40:1	0,43	R 1/2″	●
30	26	MM AP	2	175	10:1	0,43	R 1/2″	●
30	13	MM AP	2	87	20:1	0,43	R 1/2″	●
30	6	MM AP	2	44	40:1	0,43	R 1/2″	●
30	72	SM AP	4	175	10:1	0,43	R 1/2″	●
30	36	SM AP	4	87	20:1	0,43	R 1/2″	●
30	18	SM AP	4	44	40:1	0,43	R 1/2″	●
20	153	TM AP	6	175	10:1	0,43	R 3/4″	●
20	76	TM AP	6	87	20:1	0,43	R 3/4″	●
20	38	TM AP	6	44	40:1	0,43	R 3/4″	●

PRIUS D 60Hz AP THREE-PHASE ATEX 2D

bar	l/h	Pump Head				Motor	AISI 316L (II 2D Ex h IIIC T120° Db)	Installation Kit
		model	stroke (mm)	SPM	reduction	kW	hoses connection	
100	3	LM AP	1,5	175	10:1	0,43	R 3/8″	●
100	1,5	LM AP	1,5	70	20:1	0,43	R 3/8″	●
50	14	MM AP	2	175	10:1	0,43	R 1/2″	●
50	7	MM AP	2	87	20:1	0,43	R 1/2″	●
50	3,5	MM AP	2	44	40:1	0,43	R 1/2″	●
30	26	MM AP	2	175	10:1	0,43	R 1/2″	●
30	13	MM AP	2	87	20:1	0,43	R 1/2″	●
30	6	MM AP	2	44	40:1	0,43	R 1/2″	●
30	72	SM AP	4	175	10:1	0,43	R 1/2″	●
30	36	SM AP	4	87	20:1	0,43	R 1/2″	●
30	18	SM AP	4	44	40:1	0,43	R 1/2″	●
20	153	TM AP	6	175	10:1	0,43	R 3/4″	●
20	76	TM AP	6	87	20:1	0,43	R 3/4″	●
20	38	TM AP	6	44	40:1	0,43	R 3/4″	●

PRIUS D 60Hz Series | ATEX 3G/3D

PRIUS D 60Hz THREE-PHASE ATEX 3G

bar	l/h	Pump Head				Motor	PVDF (II 3G Ex h IIC T3 Gc)	Installation Kit
		model	stroke (mm)	SPM	reduction	kW	hoses connection	
10	55	NM	3	175	10:1	0,25	/	A
10	27	NM	3	70	20:1	0,25	/	A
10	14	NM	3	35	40:1	0,25	/	A
10	100	TM	3	175	10:1	0,37	/	A
10	50	TM	3	87	20:1	0,37	/	A
10	25	TM	3	44	40:1	0,37	/	A
7	150	TM	4	175	10:1	0,37	/	A
7	75	TM	4	87	20:1	0,37	/	A
7	37	TM	4	44	40:1	0,37	/	A
5	230	TM	6	175	10:1	0,37	/	B
5	115	TM	6	87	20:1	0,37	/	B
5	57	TM	6	44	40:1	0,37	/	B
5	335	UMS	4	175	10:1	0,37	/	C
5	165	UMS	4	87	20:1	0,37	/	C
5	84	UMS	4	44	40:1	0,37	/	C
5	420	UMS	5	175	10:1	0,37	/	C
5	210	UMS	5	87	20:1	0,37	/	C
5	105	UMS	5	44	40:1	0,37	/	C
5	505	UMS	6	175	10:1	0,37	/	C
5	250	UMS	6	87	20:1	0,37	/	C
5	126	UMS	6	44	40:1	0,37	/	C

PRIUS D 60Hz THREE-PHASE ATEX 3G

bar	l/h	Pump Head				Motor	AISI 316L (II 3G Ex h IIC T3 Gc)	Installation Kit
		model	stroke (mm)	SPM	reduction	kW	hoses connection	
5	335	UMS	4	175	10:1	0,37	/	C
5	165	UMS	4	87	20:1	0,37	/	C
5	84	UMS	4	44	40:1	0,37	/	C
5	420	UMS	5	175	10:1	0,37	/	C
5	210	UMS	5	87	20:1	0,37	/	C
5	105	UMS	5	44	40:1	0,37	/	C
5	505	UMS	6	175	10:1	0,37	/	C
5	250	UMS	6	87	20:1	0,37	/	C
5	126	UMS	6	44	40:1	0,37	/	C

PRIUS D 60Hz Series | ATEX 3G/3D

PRIUS D 60Hz THREE-PHASE ATEX 3G

bar	l/h	Pump Head				Motor	PP (II 3G Ex h IIC T3 Gc)	Installation Kit
		model	stroke (mm)	SPM	reduction	kW	hoses connection	
10	55	NM	3	175	10:1	0,25	/	A
10	27	NM	3	70	20:1	0,25	/	A
10	14	NM	3	35	40:1	0,25	/	A
10	100	TM	3	175	10:1	0,37	/	A
10	50	TM	3	87	20:1	0,37	/	A
10	25	TM	3	44	40:1	0,37	/	A
7	150	TM	4	175	10:1	0,37	/	A
7	75	TM	4	87	20:1	0,37	/	A
7	37	TM	4	44	40:1	0,37	/	A
5	230	TM	6	175	10:1	0,37	/	B
5	115	TM	6	87	20:1	0,37	/	B
5	57	TM	6	44	40:1	0,37	/	B
5	335	UMS	4	175	10:1	0,37	/	C
5	165	UMS	4	87	20:1	0,37	/	C
5	84	UMS	4	44	40:1	0,37	/	C
5	420	UMS	5	175	10:1	0,37	/	C
5	210	UMS	5	87	20:1	0,37	/	C
5	105	UMS	5	44	40:1	0,37	/	C
5	505	UMS	6	175	10:1	0,37	/	C
5	250	UMS	6	87	20:1	0,37	/	C
5	126	UMS	6	44	40:1	0,37	/	C

PRIUS D 60Hz THREE-PHASE ATEX 3D

bar	l/h	Pump Head				Motor	PVDF (II 3D Ex h IIIC T120° Dc)	Installation Kit
		model	stroke (mm)	SPM	reduction	kW	hoses connection	
10	55	NM	3	175	10:1	0,29	/	A
10	27	NM	3	70	20:1	0,29	/	A
10	14	NM	3	35	40:1	0,29	/	A
10	100	TM	3	175	10:1	0,43	/	A
10	50	TM	3	87	20:1	0,43	/	A
10	25	TM	3	44	40:1	0,43	/	A
7	150	TM	4	175	10:1	0,43	/	A
7	75	TM	4	87	20:1	0,43	/	A
7	37	TM	4	44	40:1	0,43	/	A
5	230	TM	6	175	10:1	0,43	/	B
5	115	TM	6	87	20:1	0,43	/	B
5	57	TM	6	44	40:1	0,43	/	B
5	335	UMS	4	175	10:1	0,43	/	C
5	165	UMS	4	87	20:1	0,43	/	C
5	84	UMS	4	44	40:1	0,43	/	C
5	420	UMS	5	175	10:1	0,43	/	C
5	210	UMS	5	87	20:1	0,43	/	C
5	105	UMS	5	44	40:1	0,43	/	C
5	505	UMS	6	175	10:1	0,43	/	C
5	250	UMS	6	87	20:1	0,43	/	C
5	126	UMS	6	44	40:1	0,43	/	C

PRIUS D 60Hz Series | ATEX 3G/3D

PRIUS D 60Hz THREE-PHASE ATEX 3D

bar	l/h	Pump Head				Motor	AISI 316L (II 3D Ex h IIIC T120° Dc)	Installation Kit
		model	stroke (mm)	SPM	reduction	kW	hoses connection	
5	335	UMS	4	175	10:1	0,43	/	C
5	165	UMS	4	87	20:1	0,43	/	C
5	84	UMS	4	44	40:1	0,43	/	C
5	420	UMS	5	175	10:1	0,43	/	C
5	210	UMS	5	87	20:1	0,43	/	C
5	105	UMS	5	44	40:1	0,43	/	C
5	505	UMS	6	175	10:1	0,43	/	C
5	250	UMS	6	87	20:1	0,43	/	C
5	126	UMS	6	44	40:1	0,43	/	C

PRIUS D 60Hz THREE-PHASE ATEX 3D

bar	l/h	Pump Head				Motor	PP (II 3D Ex h IIIC T120° Dc)	Installation Kit
		model	stroke (mm)	SPM	reduction	kW	hoses connection	
10	55	NM	3	175	10:1	0,29	/	A
10	27	NM	3	70	20:1	0,29	/	A
10	14	NM	3	35	40:1	0,29	/	A
10	100	TM	3	175	10:1	0,43	/	A
10	50	TM	3	87	20:1	0,43	/	A
10	25	TM	3	44	40:1	0,43	/	A
7	150	TM	4	175	10:1	0,43	/	A
7	75	TM	4	87	20:1	0,43	/	A
7	37	TM	4	44	40:1	0,43	/	A
5	230	TM	6	175	10:1	0,43	/	B
5	115	TM	6	87	20:1	0,43	/	B
5	57	TM	6	44	40:1	0,43	/	B
5	335	UMS	4	175	10:1	0,43	/	C
5	165	UMS	4	87	20:1	0,43	/	C
5	84	UMS	4	44	40:1	0,43	/	C
5	420	UMS	5	175	10:1	0,43	/	C
5	210	UMS	5	87	20:1	0,43	/	C
5	105	UMS	5	44	40:1	0,43	/	C
5	505	UMS	6	175	10:1	0,43	/	C
5	250	UMS	6	87	20:1	0,43	/	C
5	126	UMS	6	44	40:1	0,43	/	C

FEATURES

- Horizontal mounting
- Aluminium enclosure
- Spring return mechanism
- Double ball check valve (where available)
- Manual stroke length adjustment
- Liquid ends available in different sizes and materials
- Tropicalized motor
- Available with ATEX certification

INSTALLATION

- Kit installation A included
- Kits installation B and C sold separately
- The pump with pump head in AISI316L does not have accessories for installation

PUMP HEADS

PVDF

PP

AISI316

Via Donatori di Sangue, 1 - 02100 Rieti (Italy)
+39 074622841 | emecpumps.com

Specifications subject to change without notice | R2025

emec
SIMPLE AS WATER

IQNET CERTIFIED MANAGEMENT SYSTEM
qualityaustria SYSTEM CERTIFIED
ISO 9001:2015 No.07728/0
ISO 14001:2015 No.00997/0
ISO 45001:2018 No.01121/0

Series\PRIUS D 60 Hz

Diaphragm motor-driven dosing pumps

technical data
manuals
datasheets
exploded-views

PRIUS D 60 Hz

Diaphragm pump with constant dosing

FEATURES

- PTFE diaphragm
- Manual stroke length adjustment
- Liquid ends available in different sizes and materials

FUNCTIONS

- Constant dosing

MOTORS

0,37 kW 220/380 V 3-phase
0,18 kW 220/380 V 3-phase
0,55 kW 220/380 V 3-phase

PRIUS D 60 Hz Mono

Diaphragm pump with constant dosing and single-phase motor

FEATURES

- PTFE diaphragm
- Manual stroke length adjustment
- Liquid ends available in different sizes and materials
- Single-phase motor

FUNCTIONS

- Constant dosing

MOTORS

0,37 kW 220 V single-phase
0,55 kW 220 V single-phase

PRIUS D 60Hz AP

Diaphragm pump with constant dosing for high pressure

FEATURES

- PTFE diaphragm
- Manual stroke length adjustment
- Liquid ends available in different sizes and materials
- For high pressure

FUNCTIONS

- Constant dosing

MOTORS

0,37 kW 220/380 V 3-phase

PRIUS D 60Hz AP Mono

Diaphragm pump for high pressure with single-phase motor

FEATURES

- PTFE diaphragm
- Manual stroke length adjustment
- Liquid ends available in different sizes and materials
- For high pressure
- Single-phase motor

FUNCTIONS

- Constant dosing

MOTORS

0,37 kW 220 V single-phase
0,55 kW 220 V single-phase

ATEX - Category 2

Category 2		
Installation areas liable to be endangered by explosive atmospheres.	Pumps intended for use in areas in which explosive atmospheres are likely to occur.	
	G (gas)	D (dust)
1999/92/EC	Zone 1	Zone 21

- **Explosive atmospheres consists of air and combustible matter, such as gases, vapours, mists or dusts in which the explosion spreads after ignition.**
- **Atex pumps are designed in accordance with ATEX directive 2014/34/EU and can be used in areas (zones) classified according to ATEX directive 1999/92/CE.**
- **Stainless steel liquid ends (AISI 316).**

ATEX - Category 3

Category 3		
Installation areas liable to be endangered by explosive atmospheres.	Pumps intended for use in areas in which explosive atmospheres only rarely occur.	
	G (gas)	D (dust)
1999/92/EC	Zone 2	Zone 22

- **Explosive atmospheres consists of air and combustible matter, such as gases, vapours, mists or dusts in which the explosion spreads after ignition.**
- **Atex pumps are designed in accordance with ATEX directive 2014/34/EU and can be used in areas (zones) classified according to ATEX directive 1999/92/CE.**

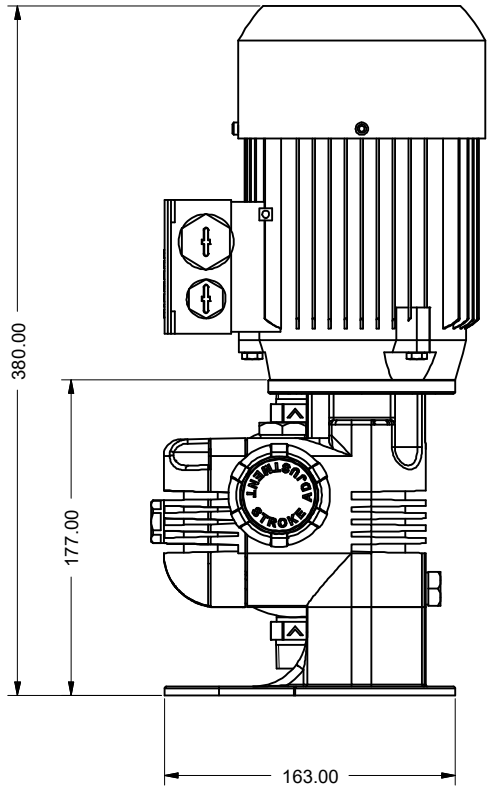

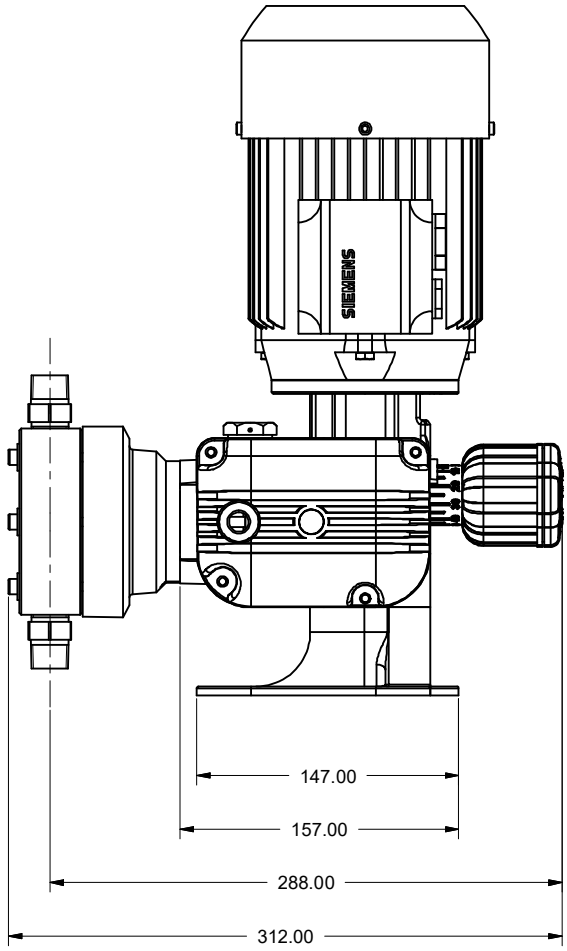

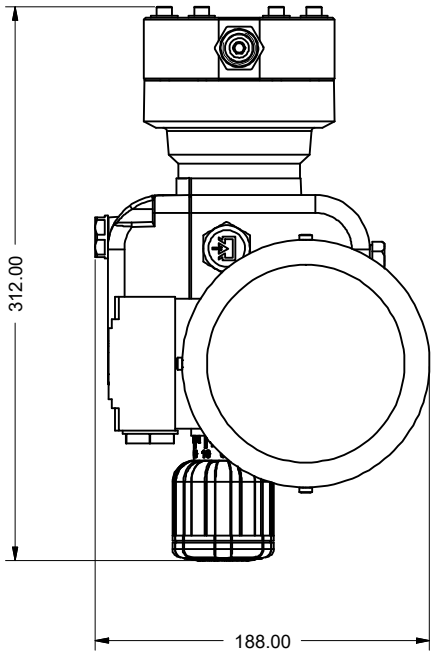

Via Donatori di Sangue, 1 - 02100 Rieti (Italy)
+39 074622841 | emecpumps.com

Specifications subject to change without notice | R2025

emec
SIMPLE AS WATER

IQNET CERTIFIED MANAGEMENT SYSTEM
qualityaustria SYSTEM CERTIFIED
ISO 9001:2015 No.07728/0
ISO 14001:2015 No.00997/0
ISO 45001:2018 No.01121/0

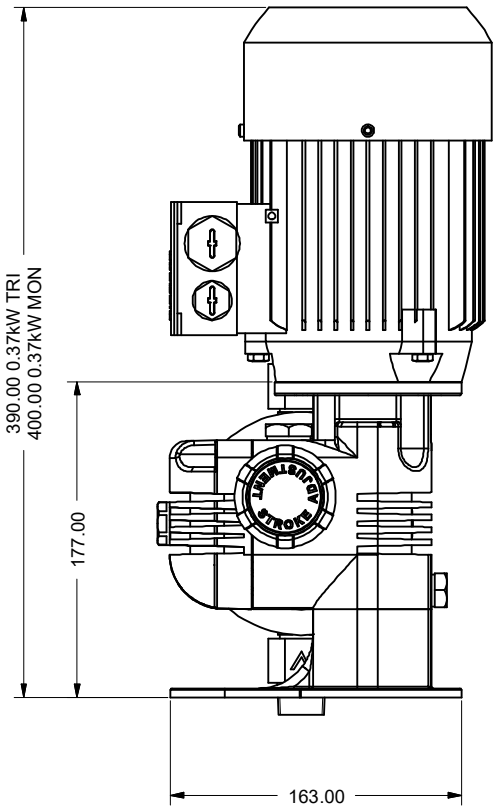

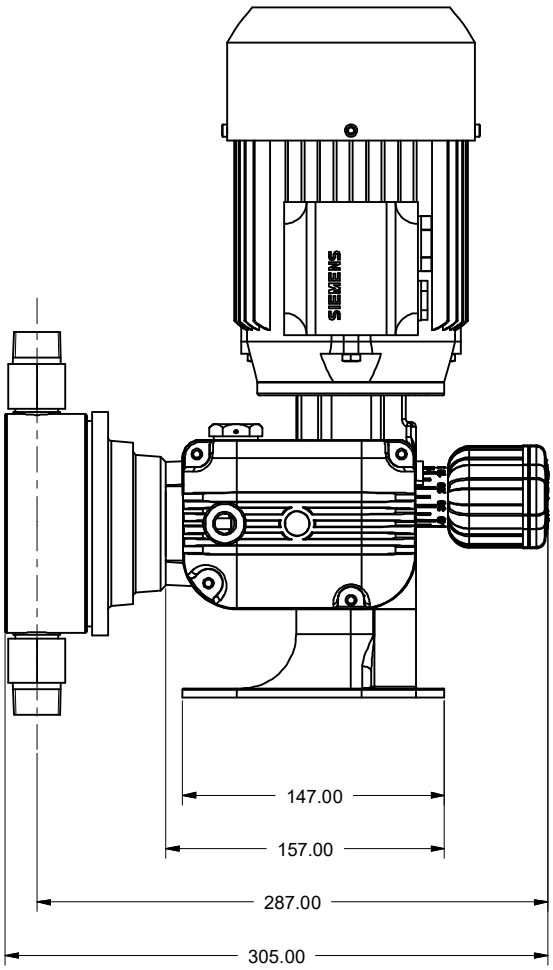

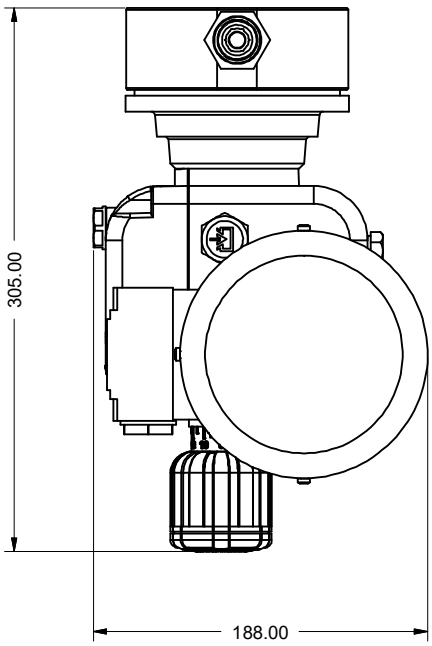

Via Donatori di Sangue, 1 - 02100 Rieti (Italy)
+39 074622841 | emecpumps.com

Specifications subject to change without notice | R2025

emec
SIMPLE AS WATER

IQNET CERTIFIED MANAGEMENT SYSTEM
qualityaustria SYSTEM CERTIFIED
ISO 9001:2015 No.07728/0
ISO 14001:2015 No.00997/0
ISO 45001:2018 No.01121/0

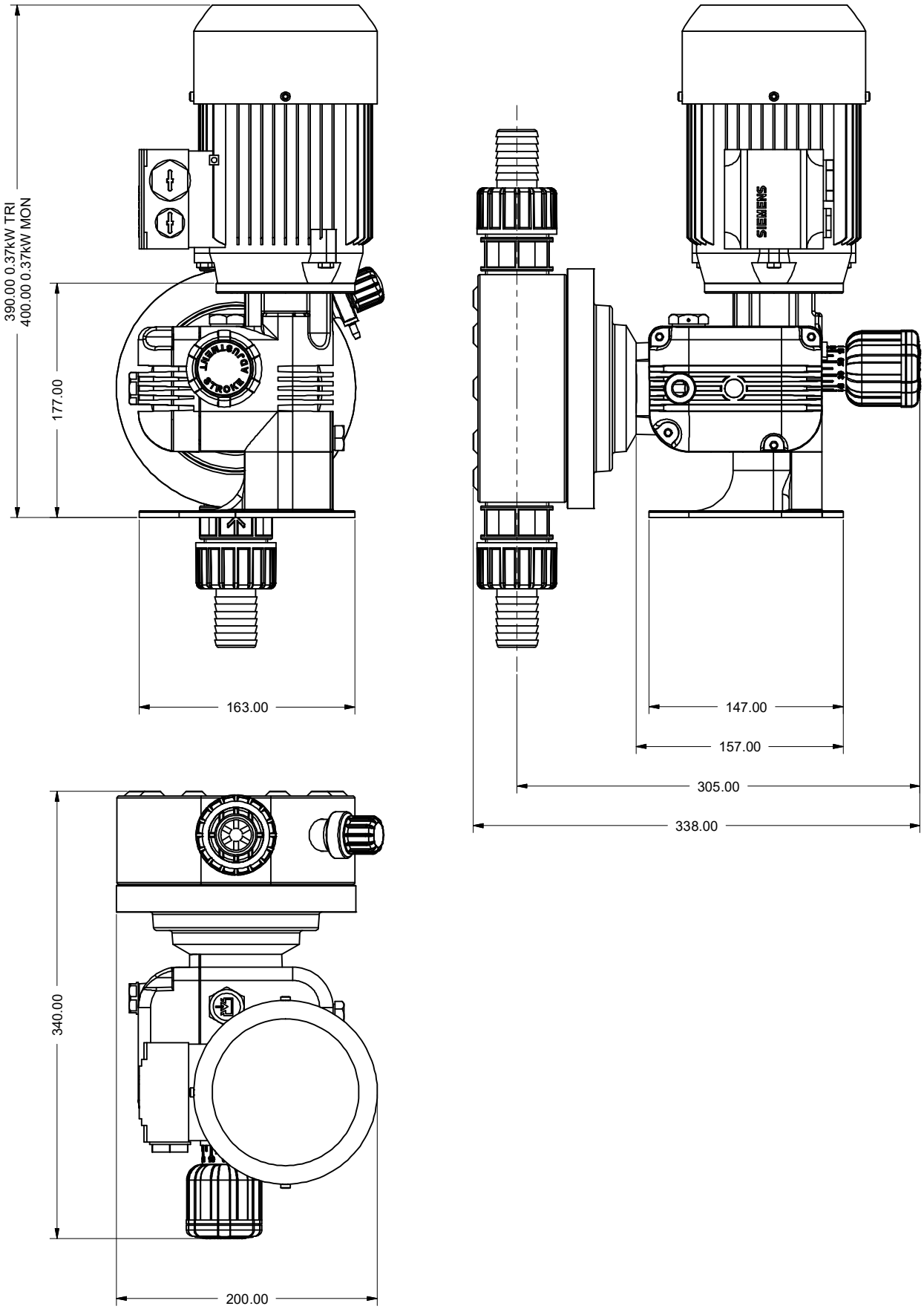

Via Donatori di Sangue, 1 - 02100 Rieti (Italy)
+39 074622841 | emecpumps.com

Specifications subject to change without notice | R2025

emec
SIMPLE AS WATER

IQNET CERTIFIED MANAGEMENT SYSTEM
qualityaustria SYSTEM CERTIFIED
ISO 9001:2015 No.07728/0
ISO 14001:2015 No.00997/0
ISO 45001:2018 No.01121/0